Super Fast, Super Strong Joinery

Discover How to Get More From Your **Table Saw**

One Set-Up Gauge that **Does it All**

Woodsmith®

Woodsmith.com Vol. 32 / No. 190

Corner Cabinet

Build a Timeless Heirloom

+

One Hand Tool that Deserves a Place in Every Shop

Sandpaper Secrets Revealed

A Publication of August Home Publishing

Table of Contents

from our readers
Tips & Techniques 4

all about
Sandpaper 8
There's more to choosing the right sandpaper than you might think. Here's how to get it right.

tools of the trade
Stack Dado Blades 10
Get the scoop on finding a stack dado blade that will give you the most bang for your buck.

jigs and fixtures
Oneway Multi-Gauge 12
Here's a handy set-up gauge that puts machine shop accuracy at your fingertips.

techniques from our shop
Pocket Hole Joinery 14
This modern joinery technique can make your projects go together faster and better.

tips from our shop
Shop Notebook 30

working with tools
Chisel Basics 42
Learn a few simple techniques that will allow you to get more from this essential hand tool.

finishing room
Hand-Rubbed High-Gloss Finish . . .44
We'll show you how to make your project shine with this tried-and-true finishing technique.

details of craftsmanship
Molded Door Frames. 48
Using a combination of power and hand tools, you can make classic-looking door frames.

in the mailbox
Q & A 50

hardware and supplies
Sources 51

Knock-Down Bookcase page 24

Quilt-Top Box page 18

projects

weekend project

Quilt-Top Keepsake Box 18

There's no stitching required — just a couple days of straightforward woodworking. The end result is a unique project that's guaranteed to attract attention and compliments.

designer series project DESIGNER'S NOTEBOOK

Knock-Down Bookcase 24

Who says that straightforward construction and style can't go hand in hand? Here's proof positive. No-nonsense techniques and simple details add up to a practical, great-looking project.

heirloom project

Classic Corner Cabinet 32

This handsome corner cabinet gets all the traditional details right — from its crown molding and beaded back to its painted finish. The bonus is making good use of an empty corner.

Corner Cabinet page 32

editor's note

Sawdust

Just about every year or two, a new jig or tool comes along that's touted as being the latest, greatest thing in woodworking. Now call me a skeptic, but my natural tendency is to ignore the hype and promises made by the marketers of most of these products. Because woodworking has been around for centuries, it's hard to believe there are really any "new" ideas. But every once in a while I'm reminded not to be so quick to jump to this conclusion.

A case in point is pocket hole joinery. When it started becoming popular several years ago, I didn't pay much attention. While it seemed fine for knocking together kitchen cabinets, the idea of using pocket screws to build furniture went against everything I'd learned about traditional joinery methods. However, I've gradually become a pocket hole convert for a number of reasons.

For one thing, pocket hole joinery has been around long enough to prove that it's not just a flash in the pan. But more importantly, it's hard to argue with the results. Not only is it a fast and simple method of construction, it's also surprisingly strong. You'll find it's an easy technique to master (see page 14), and it doesn't require a huge investment in equipment. (You can purchase a basic pocket hole jig for around $20.)

Now granted, I probably wouldn't use pocket screws to build an heirloom piece of period furniture. But for many woodworking tasks, pocket hole joinery definitely has its place. The knock-down bookcase on page 24 is a perfect example. Using pocket screws to assemble the sides of the bookcase cuts down the construction time considerably, without sacrificing strength or appearance.

The point I'm trying to make here is that no matter how long you've been woodworking, it's worth keeping an open mind to new ideas or methods. Do some research, give it a try, and then draw your own conclusions. That's the best way I know of to continue learning and expanding your woodworking skills and abilities.

Terry

This issue of *Woodsmith* is dedicated to the memory of Joel Hess (1955 - 2010)

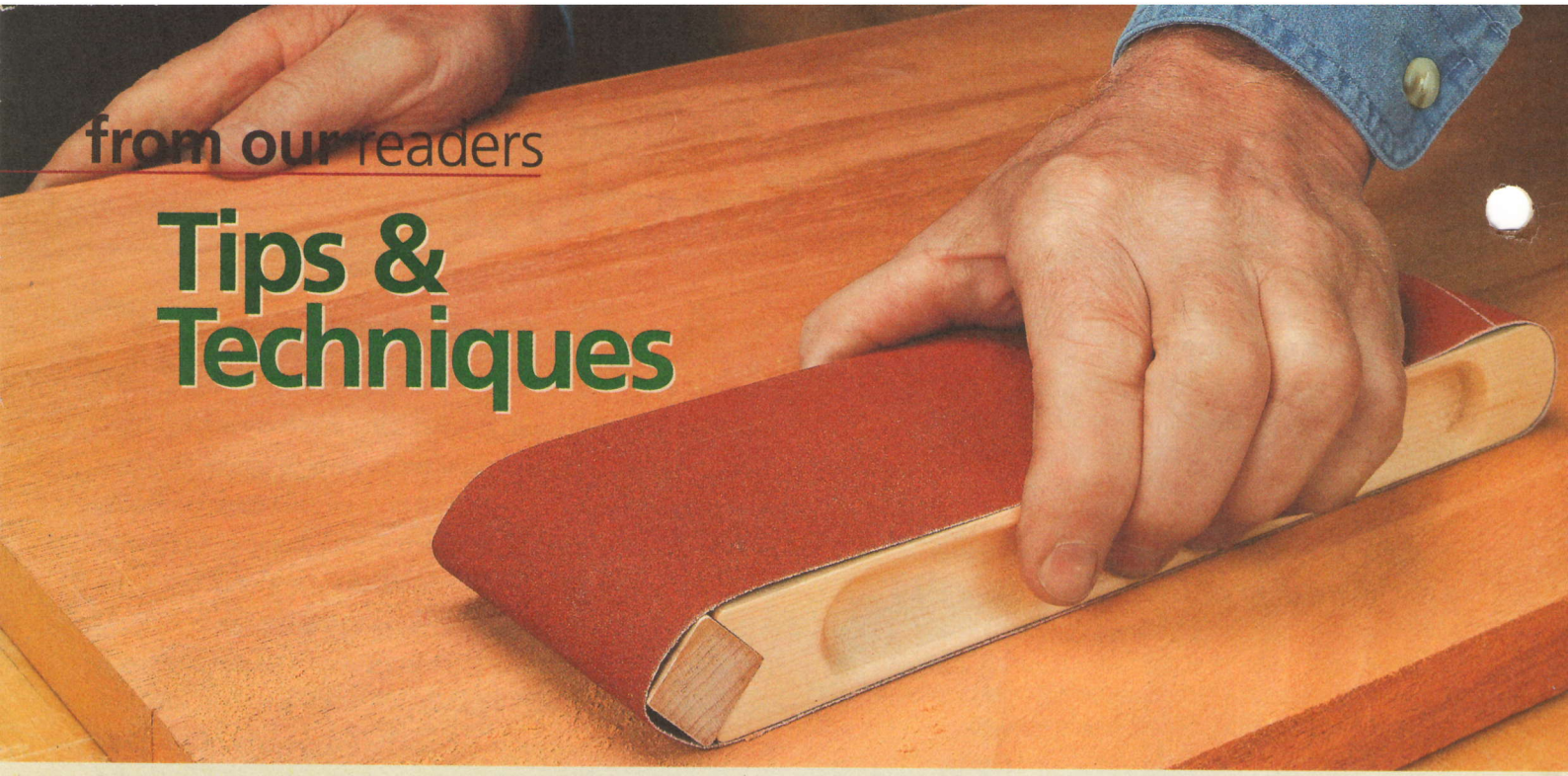

from our readers

Tips & Techniques

Sanding Block

To help sand large surfaces, I built the sanding block you see in the photo above. It accepts a small sanding belt and is great for flattening a workpiece. As you can see in the drawing below, the belt just slips over the block and a tension bar holds it in place.

To determine the length of the block, I measured the belt while it was folded and then reduced the length by about ½". One end of the block is rounded over and the other end has a V-shaped notch cut in it (detail 'a'). The notch holds a square tension bar. I also routed finger holds in the sides for a better grip.

To use the sanding block, slip it in a belt and slide the tension bar in the notch on the end.

Jim Powers
Bonner Springs, Kansas

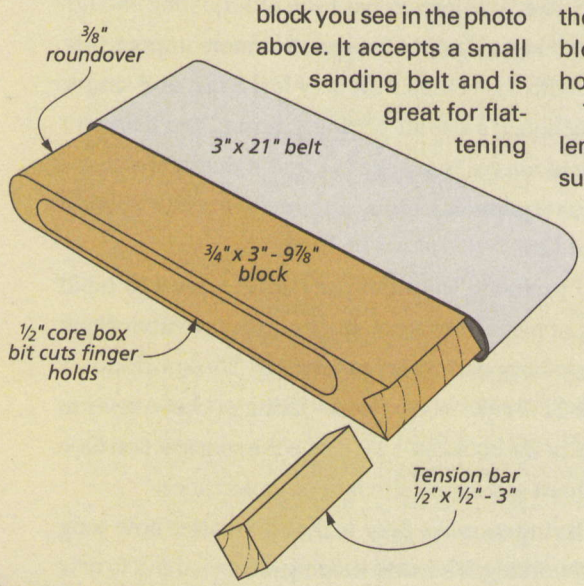

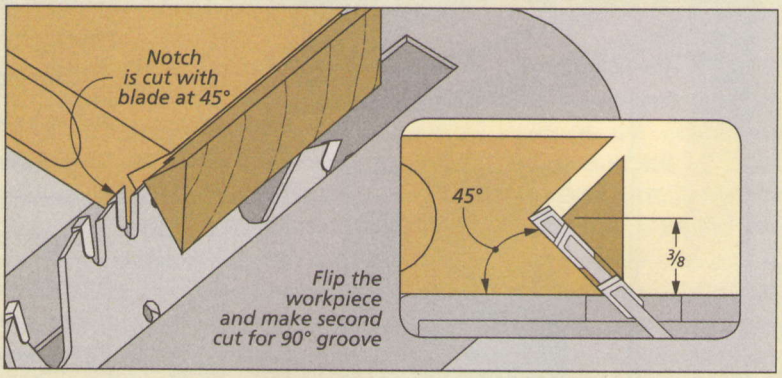

Soft Sander

When I want to smooth and soften the edge of a workpiece, all in one step, I could go to the expense of buying an inflatable sanding drum. But I found that foam pipe insulation used on a spindle sander gives me the same result as the expensive sanders.

You can purchase pipe insulation at any hardware store or home center. I cut a piece the same length as a spindle and then attached adhesive-back sandpaper to the insulation. The foam slips over a variety of sizes of spindles and you just tighten it down with the compression nut.

Don Malette
San Diego, California

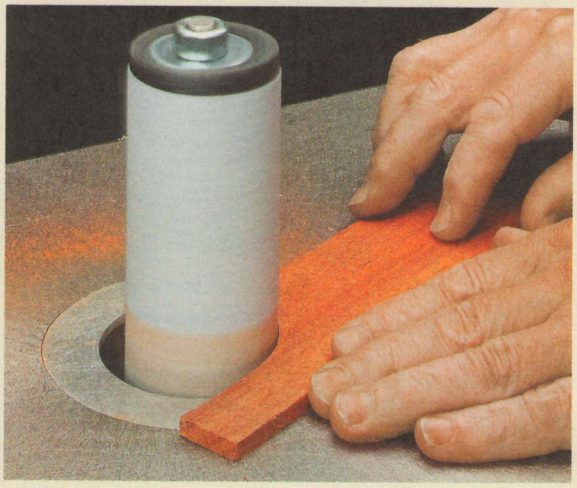

Face Vise Adjustment

Clamping a workpiece vertically at one end of a face vise can cause the vise jaws to rack. To remedy this problem, I added a bolt and nut to the vise to equalize the pressure at both ends of the vise jaws.

You can see in the photos and drawings below how I embedded a nut in the auxiliary jaw, then added a bolt for adjustments. Now I can adjust the gap to any width.

Alejandro Balbis
Longueuil, Quebec

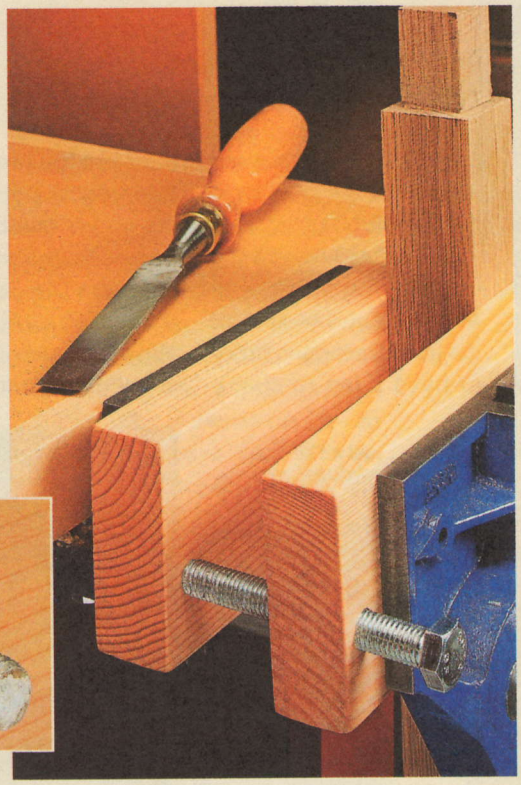

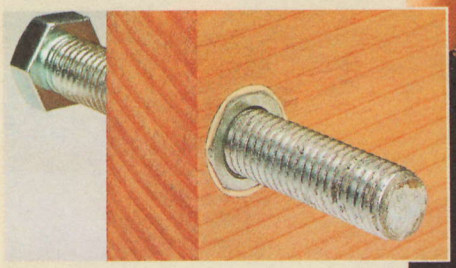

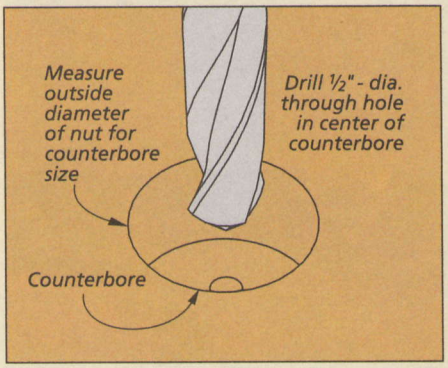

First. *Drill a counterbore in the outer auxiliary jaw of the vise large enough to hold a ½" nut. Then drill a ½"-dia through hole.*

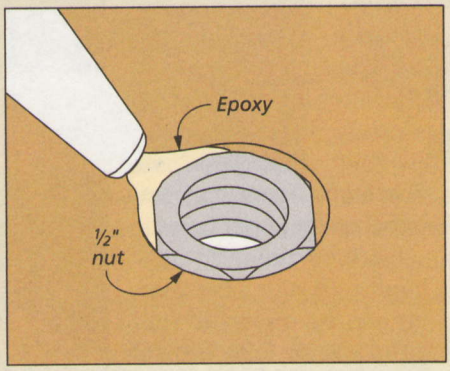

Second. *A dab of epoxy will hold the nut in place. Then the bolt threads through it and can be adjusted as needed (photo).*

SUBMIT YOUR TIPS ONLINE

If you have an original shop tip, we would like to hear from you and consider publishing your tip in one or more of our publications. Go to:

Woodsmith.com
Click on the link,
"SUBMIT A TIP"

You'll be able to tell us all about your tip and upload your photos and drawings. You can also mail your tips to *"Woodsmith Tips"* at the editorial address shown at right. We will pay up to $200 if we publish your tip.

FREE TIPS BY EMAIL

Now you can have the best, time-saving secrets, solutions, and techniques sent directly to your email inbox. Just go to **Woodsmith.com** and click on ***"Sign Up for Free E-Tips."*** You'll receive one of our favorite tips each week.

Woodsmith®

No. 190 August/September 2010

PUBLISHER Donald B. Peschke

EDITOR Terry J. Strohman
MANAGING EDITOR Vincent Ancona
SENIOR EDITOR Ted Raife
ASSOCIATE EDITOR Dennis Perkins
ASSISTANT EDITOR Carol Beronich
CONTRIBUTING EDITORS Bryan Nelson, Phil Huber, Randall A. Maxey, Joel Hess

EXECUTIVE ART DIRECTOR Todd Lambirth
SENIOR ILLUSTRATORS David Kreyling, Harlan V. Clark
SENIOR GRAPHIC DESIGNER Bob Zimmerman
GRAPHIC DESIGNER Shelley Cronin
GRAPHIC DESIGN INTERN Megan Hann
CONTRIBUTING ILLUSTRATORS Dirk Ver Steeg, Peter J. Larson, David Kallemyn, Erich Lage

CREATIVE DIRECTOR Ted Kralicek
SENIOR PROJECT DESIGNERS Ken Munkel, Kent Welsh, Chris Fitch, Jim Downing, Mike Donovan
PROJECT DESIGNER/BUILDER John Doyle
SHOP CRAFTSMEN Steve Curtis, Steve Johnson
SENIOR PHOTOGRAPHERS Crayola England, Dennis Kennedy
ASSOCIATE STYLE DIRECTOR Rebecca Cunningham
SENIOR ELECTRONIC IMAGE SPECIALIST Allan Ruhnke
PRODUCTION ASSISTANT Minniette Johnson
VIDEO EDITOR/DIRECTOR Mark Hayes, Nate Gruca

Woodsmith® (ISSN 0164-4114) is published bimonthly by August Home Publishing Company, 2200 Grand Ave, Des Moines, IA 50312.

Woodsmith® is a registered trademark of August Home Publishing.
Copyright© 2010 August Home Publishing Company. All rights reserved.

Subscriptions: Single copy: $4.95.
Canadian Subscriptions: Canada Post Agreement No. 40038201. Send change of address information to PO Box 881, Station Main, Markham, ON L3P 8M6.
Canada BN 84597 5473 RT
Periodicals Postage Paid at Des Moines, IA, and at additional offices.
Postmaster: Send change of address to *Woodsmith*, Box 37106, Boone, IA 50037-0106.

WoodsmithCustomerService.com

ONLINE SUBSCRIBER SERVICES

- **VIEW** your account information
- **RENEW** your subscription
- **CHECK** on a subscription payment
- **PAY** your bill
- **CHANGE** your mailing or e-mail address
- **VIEW/RENEW** your gift subscriptions
- **TELL US** if you've missed an issue

CUSTOMER SERVICE **Phone: 800-333-5075**

SUBSCRIPTIONS
Customer Service
P.O. Box 842
Des Moines, IA 50304-9961
subscriptions@augusthome.com

EDITORIAL
Woodsmith Magazine
2200 Grand Avenue
Des Moines, IA 50312
woodsmith@woodsmith.com

AUGUST HOME PUBLISHING COMPANY

Printed in U.S.A.

Branding Jig

I use a branding iron to mark my woodworking projects. To keep the brand nice and straight on the project, I built the jig you see here.

It's easy to position and clamp the jig to my projects. And it's even easier to align the iron in the jig once it's clamped.

You can see how the jig is made in the drawing below. I cut one side of the jig extra long in order to have a leg to clamp the jig to the project. The opening should match the size of the branding iron so there's no play.

To use the jig, clamp it to your project and align the opening with the edge of your project. Then insert the iron in the jig after it's been heated.

Now as I insert the iron in the jig, I know that it's straight and square and my brand will be too.

Brian Cunningham
Suffolk, Virginia

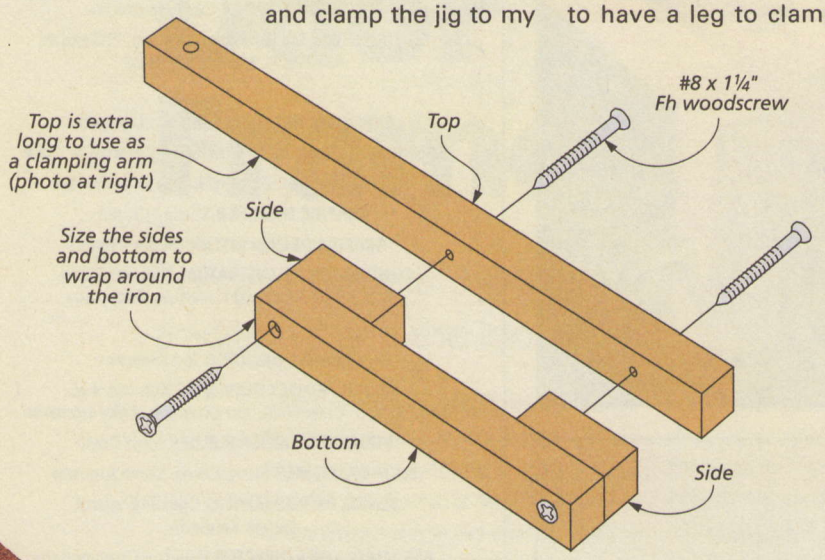

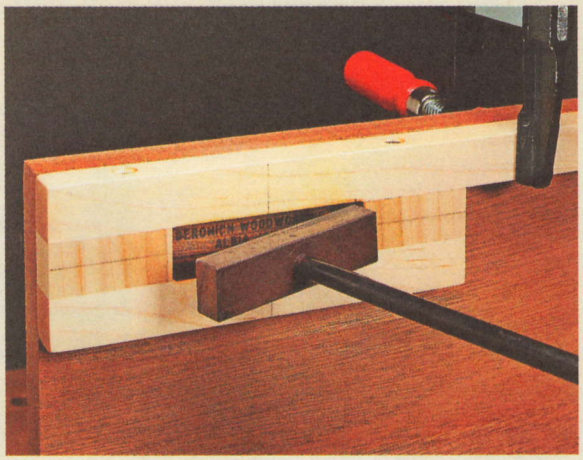

Multi-Use Template

Small drafting circle templates work well for checking the size of smaller drill bits. But when I need to check the size of a bit that's larger than 1" it doesn't do much good. That's why I made my own template for larger holes.

I drilled holes in ¼"-hardboard with a Forstner bit and then marked the size of each hole with a permanent marker. Now I can check the size of a bit or a dowel. Or I can mark a perfect radius on a project using the template.

Charles Mak
Calgary, Alberta

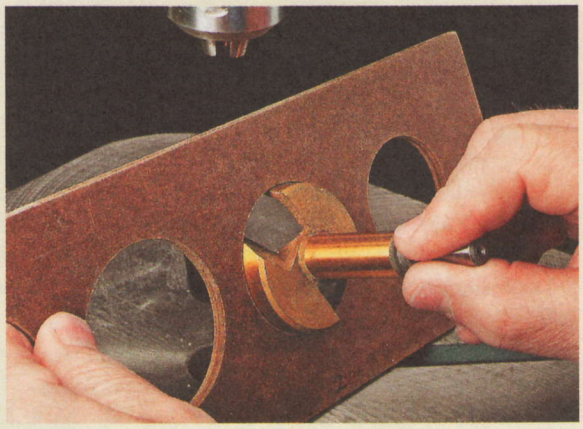

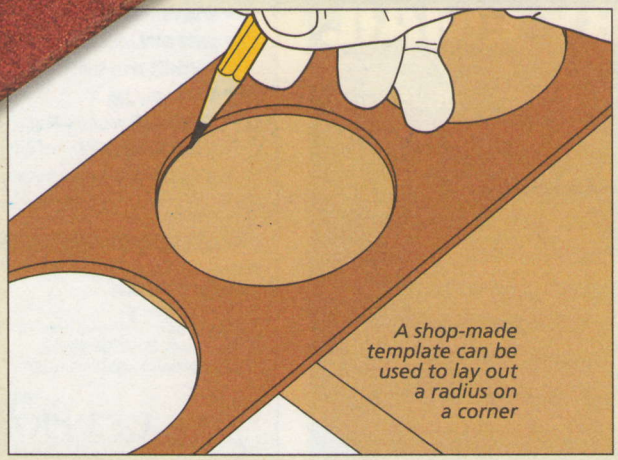

A shop-made template can be used to lay out a radius on a corner

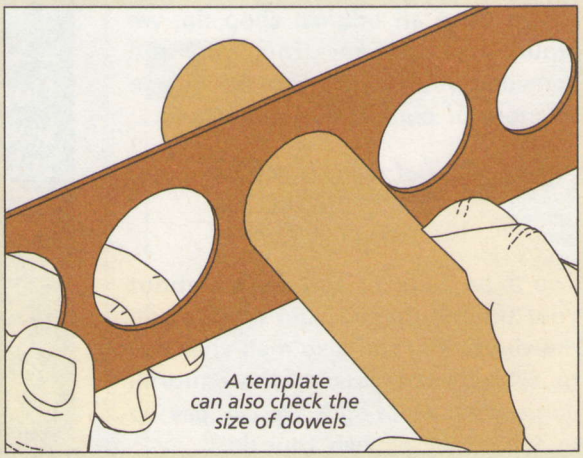

A template can also check the size of dowels

Anchor Drawer Liners

Few things are more frustrating than having a non-skid drawer liner slide around on the bottom of a drawer. But I found a way to keep the liner from shifting in the drawer.

A dab of hot-melt glue along the front corners of the drawer will hold the liner in place. When it needs cleaning, just pull the liner forward and replace it after.

Cory Hoehn
Jeffersonville, Indiana

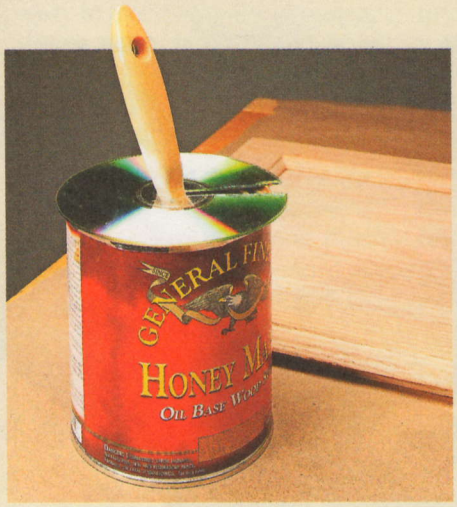

CD Paint Brush Holder

I like to keep the handle and ferrule of my paintbrush clean when I'm applying a finish. This way, I have an easier clean up job when I'm done with the finish. There are some holders that you can make, but I prefer this simple substitute.

I cut a slot in an old compact disk and slide it over the brush handle. It keeps the brush upright and off the edge of the can. The small hole keeps the paint brush from dropping to the bottom of the can.

Lorraine Choi
Calgary, Alberta

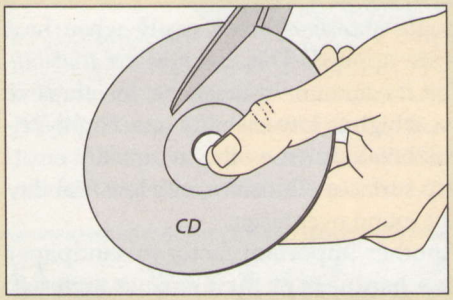

Cut a Slot. *Household scissors will easily cut through a compact disk. Just clip the disk through to the center hole.*

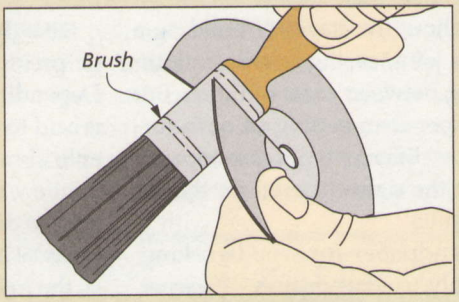

Insert the Brush. *The disk will bend slightly without breaking so that you can insert the brush handle in the center hole.*

Win This Bosch *Impactor* Driver

That's right, send us your favorite shop tips. If your tip or technique is selected as the featured reader's tip, you'll win a *Bosch* impact driver just like the one shown here. To submit your tip or technique, just go online to *woodsmith.com* and click on the link, "SUBMIT A TIP." You can submit your tip and upload your photos for consideration.

The Winner!

Congratulations to Jim Powers, winner of the *Bosch Impactor* driver. To find out how you could win a *Bosch* driver, check out the information on the left.

Quick Tips

BENCH DOG PADS

Occasionally I find it necessary to put a finished workpiece between the bench dogs on my workbench. But this can mar the finish.

To prevent this, I use wine bottle corks between the dogs and the workpiece. I've found that the synthetic corks work better than natural cork. They grip tightly, requiring only a small amount of pressure from the bench vise.

Ken Harrington
Herndon, Virginia

CA GLUE DOUBLE CONTAINER

Cyanoacrylate (CA) glue dries out pretty fast. Especially if it's not stored properly. Sometimes the tip will clog even in the protective tube that comes with the glue.

I found that storing my CA glue tube and its original container in a prescription drug bottle reduces the clogging in the tip. Now I have CA glue that lasts longer and is fresh when I need it.

Tiffany Mak
Montreal, Quebec

FOAM BRUSH USES

Foam brushes are a handy tool for applying a finish on projects. But I don't like just throwing away the brush after I use it. So I've found several uses in my shop for the different parts of the foam brush.

After I've used a brush to apply a finish, I let it dry. Then I peal away the foam to reveal a thin plastic fin that keeps the foam in shape during use. This piece of plastic is still attached to the handle of the brush and it makes a great glue spreader that I can use several times over before it wears out.

When the plastic no longer works as a glue spreader, I remove it. What's left is a ½"-dia. dowel that I can use to make wood pins or plugs for another project.

Chris Liebermann
Ashburn, Virginia

a close look at Sandpaper

The key to choosing the right sandpaper is matching the type of abrasive to the task at hand.

I use sandpaper throughout the stages of building a project — fine-tuning a joint, easing edges, smoothing panels, and sanding between coats of finish. But there's more to sandpaper than getting smooth surfaces. Understanding how different types of sandpaper work helps you choose the right material for the job and get better, faster results.

When it comes to sandpaper for woodworking, there are four commonly used abrasives — garnet, aluminum oxide, silicon carbide, and alumina zirconia. And each type has its own unique characteristics and working properties, as you can see from the chart in the lower right corner of the opposite page.

FRIABILITY. Some abrasives break easily when heat or pressure are applied. This is know as *friability*. Depending on the amount of breakage, the abrasive is said to have a high or low friability rate. Highly friable abrasives break down easily, continually creating new, sharp surfaces. Abrasives with low friability tend to dull or round over faster.

HARDNESS. Another important factor in sandpaper is the relative hardness of the abrasive material. The different types of sandpaper have varying degrees of hardness. (Hardness is measured by testing with a diamond.) But hardness is no indication of friability, as you'll see.

▼ The four types of abrasives commonly used in sandpaper all have different working characteristics.

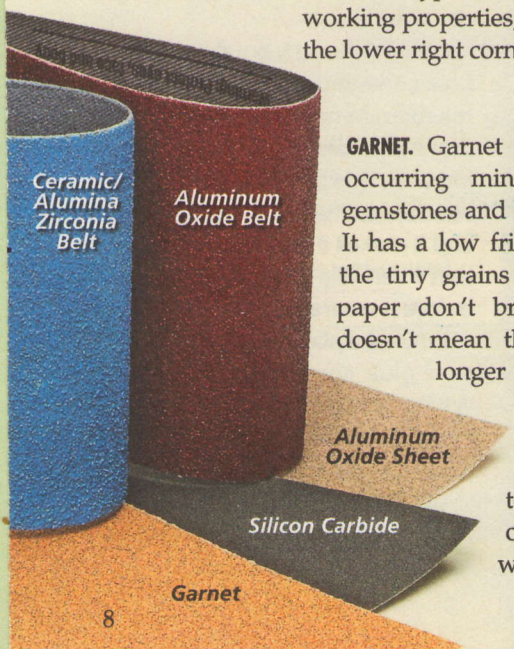

GARNET. Garnet is a naturally occurring mineral used as gemstones and as an abrasive. It has a low friability rate, so the tiny grains on this sandpaper don't break. But that doesn't mean the paper lasts longer during use. In fact, it's the opposite.

Garnet tends to round over quickly, which means the grains won't cut as effectively after they've dulled. But rounded grains aren't entirely bad when you're sanding bare wood.

Garnet's limited friability actually makes the sandpaper better at sanding end grain. Because the grit dulls easily, it does a nice job of burnishing the wood rather than cutting through it, like other sandpaper abrasives. Burnishing seals the end grain and results in a cleaner surface. Plus, the burnishing effect also produces a softer scratch pattern, which results in a smoother feel to the sanded bare wood.

The wear factor of this sandpaper makes it a poor choice for power sanding. You won't often find it made into disks or belts for power tools. For this reason it's best used for final hand sanding to create a smooth, satiny surface.

Although garnet isn't available for power tools, you will find it in sheets. And of the four types of sandpaper discussed here, it's the least expensive to buy.

ALUMINUM OXIDE. Aluminum oxide is the most common mineral used to make sandpaper for woodworking. This man-made mineral is as hard as garnet but it has a higher rate of friability. The particles break easily during use, creating renewed cutting edges. As a result, it lasts longer and sands just about any material — bare wood, painted surfaces, metal, or plastic. Because of its versatility, aluminum oxide is the workhorse of the woodworking shop.

But there are drawbacks to this type of paper too. Because the grains fracture so easily, some grains become smaller and others remain large, which results in an uneven scratch pattern on the wood surface.

Another drawback is the sharpness of the grit. Aluminum oxide is not as sharp as garnet. The particles have a rounded, chunky shape. But even at that, it still produces a surface that will take a finish well.

SILICON CARBIDE. Silicon carbide is the sharpest mineral of the four mentioned here. The grains are glass-like shards with super-sharp edges that make it great for cutting through dried finishes.

The particles break down easily and create new edges when used on hard surfaces. These edges are good at removing rust from metal, old finish from wood, or sanding between finish coats, but not so good on bare wood.

The tiny, sharp edges on the mineral also produce a uniform scratch pattern. Another reason it's good between coats of finish.

Silicon carbide sometimes has a cloth or water-resistant paper back, so it can be used with a lubricant like water or oil. The backing and ultra-fine grits (up to 3000 grit) make it a good choice for sharpening tools or wet-sanding a finish.

ALUMINA ZIRCONIA. Alumina zirconia (also known as ceramic) is another man-made mineral that really lasts. It withstands high temperatures and heavy use, so it's often used on sanding belts. I usually use it for leveling and shaping because its tough nature lets me remove a lot of wood at once.

A sanding belt coated with alumina zirconia will last longer than most other abrasives. So even though it costs a little more, you won't have to replace it as often as other types of sandpaper.

If you keep a variety of grits on hand in these four types of sandpaper, you'll have what you need for almost every task in your shop. And the results will show in your finished projects.

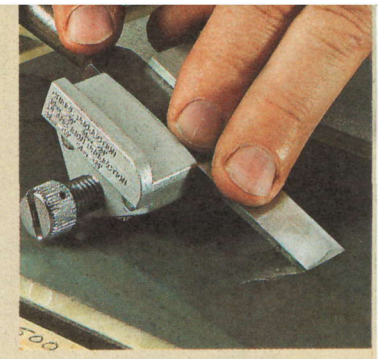

▲ Silicon carbide sandpaper is good for sharpening because of the sharp grit and its water-resistant backing.

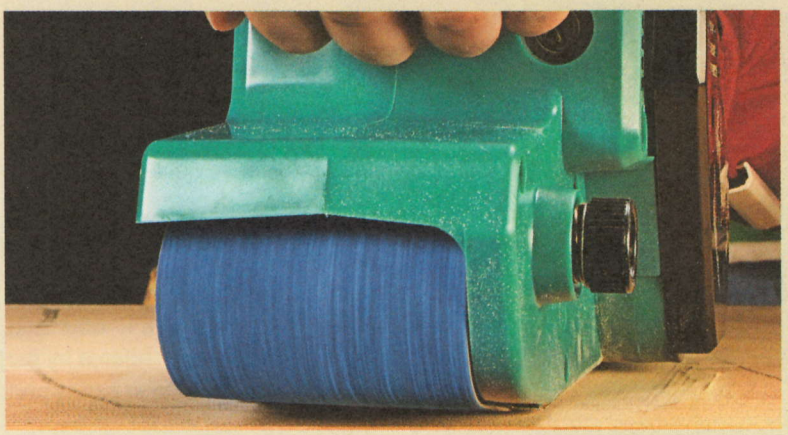

▲ Belt sanders put more stress on sandpaper than any other type of power sander. Alumina zirconia and aluminum oxide both hold up under this kind of high-speed, heat-generating action.

Open vs. Closed-Coat Paper

There are two ways to apply grit to paper — open-coat and closed-coat. These terms refer to the spacing of the individual grains of abrasive, which has a direct bearing on the useful life of the sandpaper.

Open-coat paper has wide spaces between the grains. These spaces acts like the gullets on a saw blade and allow the dust to fall away instead of clogging the paper. It helps the sandpaper last longer.

The grit on closed-coat paper is tightly packed. It's used where loading isn't an issue, such as when sanding metal. One advantage to closed-coat paper is that it produces a more even scratch pattern.

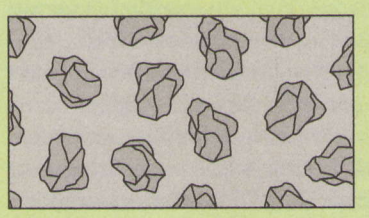

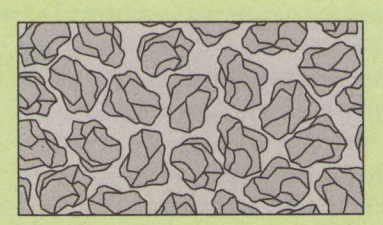

Grit Spacing. *Open-coat paper (above) allows sawdust to fall free while sanding. Closed-coat paper (below) makes a more even scratch pattern.*

Sandpaper Usage

	Garnet	Aluminum Oxide	Silicon Carbide	Ceramic/ Alumina Zirconia
Hand Sanding	✓	✓	✓	○
Power Sanding	○	✓	✓	✓
Wet Sanding	○	○	✓	○
Bare Wood	✓	✓	○	✓
Painted Wood	○	✓	✓	○
Clear Finish	○	○	✓	○
Metal	○	✓	✓	✓
Plastic	○	✓	✓	○

choosing a Stack Dado Blade

This handy accessory will turn your table saw into a one-stop joinery station.

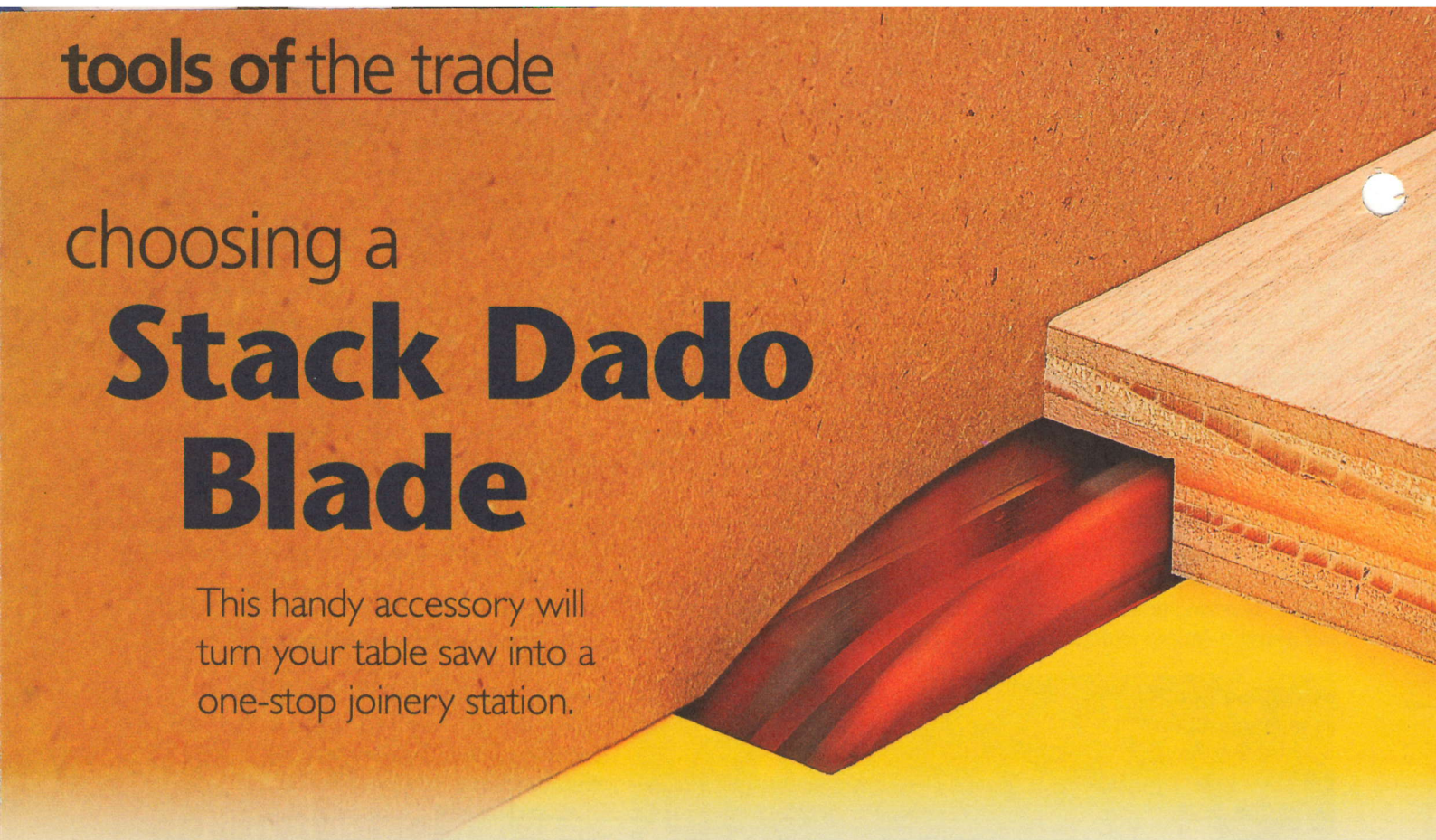

If I had to pick one "can't live without" table saw accessory, I wouldn't hesitate. A high-quality, carbide-tooth, stack dado blade would be my first choice hands down. Dollar for dollar, a stack dado blade is one of the best investments you can make to expand the capabilities of your saw and improve the quality and efficiency of your work.

LOTS OF CHOICES. The upshot is that since a stack set can be such a valuable addition, it pays to purchase one that will give you the most bang for your buck. There are a couple of things you need to consider when choosing a stack dado blade. Probably the most important factor is quality of cut. And second to this is ease of use and versatility of the blade. Will it do everything you want it to do?

The good news is that there are a number of dado blades on the market that satisfy these criteria. But many offer slightly different features. In order to know what to look for, it's helpful to have a good understanding of both the basics and some of the finer points.

THE SIMPLE STUFF. A stack dado blade set consists of two outer scoring blades and a number of chipper blades. The two scoring blades are used in combination with a specific number of chippers to obtain a cut of the desired width.

Both scoring blades are always used in the stack — positioned on either side. (There is a right and left blade.) They are responsible for cutting clean, smooth shoulders. The chippers simply remove the waste from between the scoring blades.

SIZE. The overall range of widths that a dado blade can be set up to cut is pretty standard — 1/4" to 13/16" (sometimes 7/8"). So this isn't a factor when choosing a blade.

The maximum depth of cut, determined by the diameter of the blade, is something to consider. Many dado set models come in both 6" and 8" diameters. (8" is more common.) You'll find that the extra depth of cut offered by the larger blade can come in handy and is worth the slight extra cost.

SCORING BLADES. There are two aspects to rating the quality of a dado blade cut. Ideally, you want both clean, chip-free shoulders and a flat bottom. The scoring blades play the lead role here. The tooth configuration, the number of teeth, and the tooth geometry all factor into this.

▼ The number of teeth on the scoring blades can vary widely. Twenty-four and up will give you a clean cut in most materials.

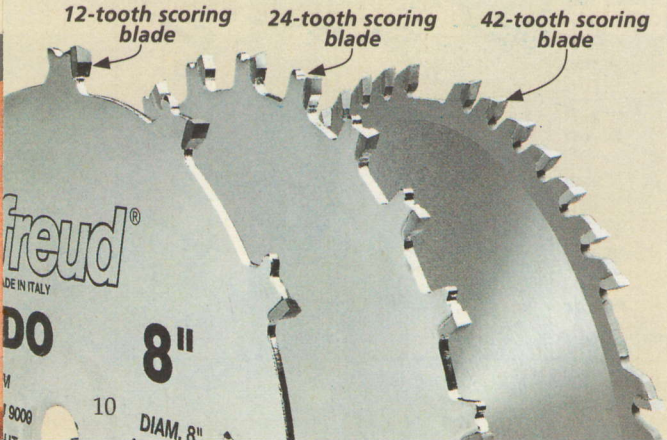

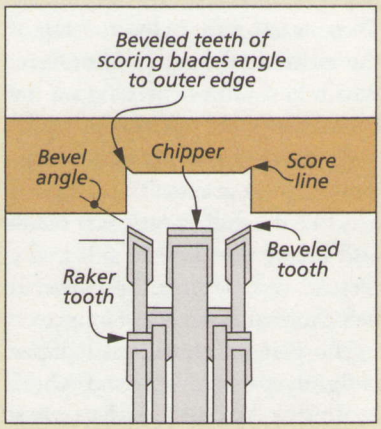

Teamwork. *The teeth of the scoring blades and chippers work together to create a clean, flat cut.*

First let's look at the tooth configuration. This is pretty universal from blade to blade. The scoring blades alternate beveled teeth with flat raker teeth. The beveled teeth scribe a clean shoulder while the flat raker teeth follow to create a flat bottom. Since each scoring blade is only responsible for cutting one shoulder, the beveled teeth all point outward. This is why you have a right and left scoring blade.

The beveled teeth are ground to cut slightly deeper than the raker teeth. The result is a barely visible score line at the corners of the dadoes. This helps reduce chipping at the trailing edge of the cut.

The number of teeth on the scoring blade also affects the quality of the cut. You'll find as few as 12 and as many as 42 (margin photo on opposite page). This is a case where more is not necessarily better. I've found that 24-tooth scoring blades give excellent results.

TOOTH GEOMETRY. The shape or geometry of the scoring teeth can have a big impact on the quality of the cut. The drawing below illustrates one aspect of this — the hook angle. This is the angle of the front face of the tooth in relation to the center point of the blade.

Many blades feature a negative hook angle of 5° or greater. The benefit is a significant reduction (or absence) of chipping along the shoulder, especially in plywood. It's something I would look for.

The bevel angle of the tooth also affects the quality of the cut.

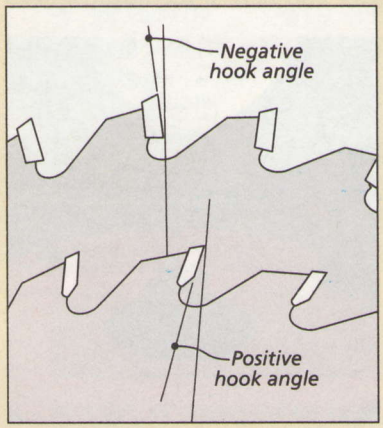

Hook Angle. *A blade with a negative hook angle cuts less aggressively resulting in a cleaner shoulder.*

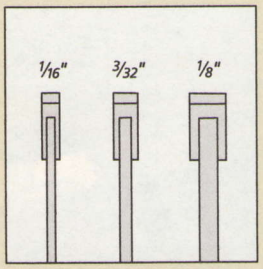

Widths. *A dado blade with chippers in a variety of widths can make setting up the stack easier.*

The standard angle seems to be 20°. But at least one blade I've tried uses a 30° bevel on the scoring teeth and the results were impressive.

THE CHIPPERS. If the scoring blades are the thoroughbreds, the chipper blades are the draft horses. They are simply designed to remove the waste between the two scoring blades and create a flat surface. Consequently, the chipper teeth are all ground flat.

And since the chippers are not responsible for the shoulder cuts, fewer teeth per blade are required. The lower-priced blades get by with only two teeth per blade. You'll find four or even six on the higher-quality blades (photo above). As you would expect, a greater number of teeth on the chippers leaves a smoother, flatter surface in all types of materials. An added benefit is a less "choppy" cutting action that makes feeding the workpiece noticeably easier.

THE NUMBERS. Another variable is the number and the size (width) of the chippers in the set. A greater number of chippers in a range of widths allows easier and more versatile setup. A value-priced stack set may come with only 3 chippers in widths up to ¼". This may give you the same overall range in width, but sizing the blade to a particular "in between" width will be more difficult.

The top-end blades generally have six chippers with the widest being ⅛". These sets will also include a 3/32" chipper and a 1/16" chipper. This makes setting up to cut snug-fitting dadoes for undersized plywood much easier.

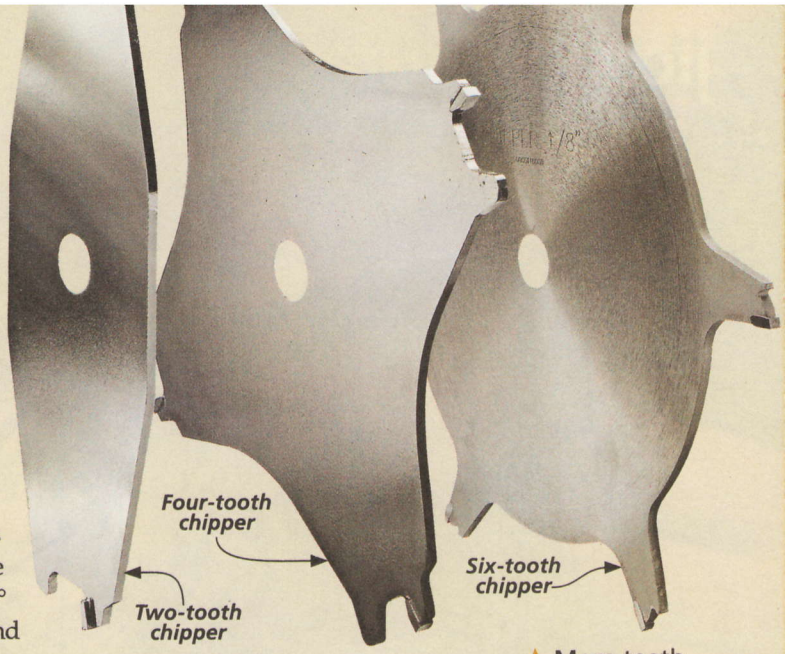

▲ More teeth on the chippers leads to a smoother bottom as well as an easier cut.

SHIMS. There's one more item you'll find essential to getting productive use from your stack dado blade. Even with six chippers of varying widths, sizing the blade for many "odd size" cuts won't be possible. However, a set of shims will allow you to fine-tune the blade to virtually any width.

Shims are very thin discs of plastic, brass, steel (sometimes magnetized), or even paper (margin photo). They're placed on the arbor between the scoring blades and chippers to precisely size the width of the cut.

Some stack sets come with shims included, and this is a plus. If not, you'll want to pick up a set when you purchase the blade. Magnetic shims are very handy. They won't slip down into the threads of the arbor as the individual parts of the blade are being installed.

▼ You'll find that plastic (left) or metal (right) shims both serve the purpose.

THE BOTTOM LINE. A high-quality dado blade won't come cheap. You can get a pretty good blade for around $100 — a really good one will run $200 or more. (See Sources on page 51 for more information.)

My advice is don't skimp. When you take into account the improvement in both productivity and quality a high-end dado blade will provide, the initial investment may not seem out of line. And once you put the blade to work, I guarantee you won't regret it. W

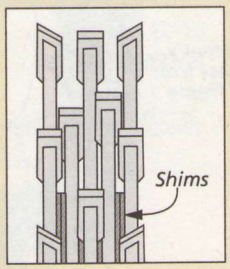

Shims. *When placed between the blades, shims fine-tune the stack width.*

Oneway **Multi-Gauge**

Bring machine shop accuracy to your woodworking with this time-saving, multi-function set-up gauge.

▼ The *Multi-Gauge* includes everything you need for precise setups.

When it comes to an all-around measuring and layout tool, it's hard to beat a combination square. But the rulers on most combination squares are only accurate down to 1/64" (assuming your eyesight is good enough to read the scale).

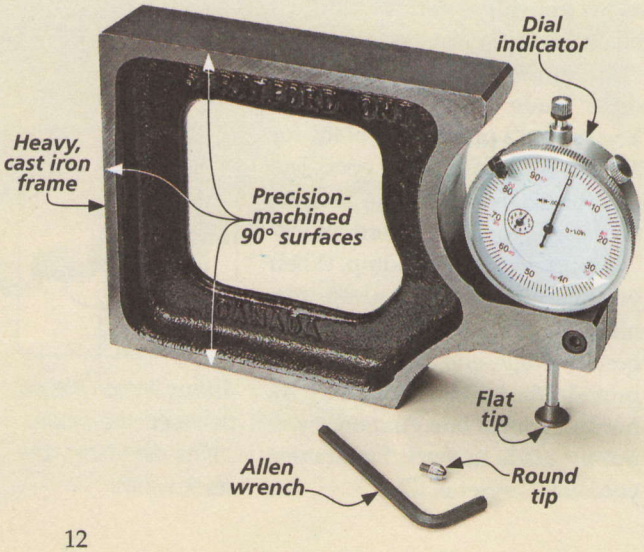

This may be fine for general measuring of parts. But for setting up tools and equipment, it's not really accurate enough. That's where the *Multi-Gauge* by *Oneway Manufacturing* comes in (photo at left). Although it was originally designed for setting up jointers, this easy-to-use device has all sorts of uses in a woodworking shop, as you'll see later.

At first glance, the *Multi-Gauge* looks like nothing more than a holder for a dial indicator. But what makes this gauge so useful is its precision. For starters, the dial indicator measures in increments of .001" — precise enough for any piece of woodworking equipment.

The frame of the gauge is constructed out of rugged cast iron, and the sides and edges of the gauge are machined flat and square. The large size and heft of the frame allows

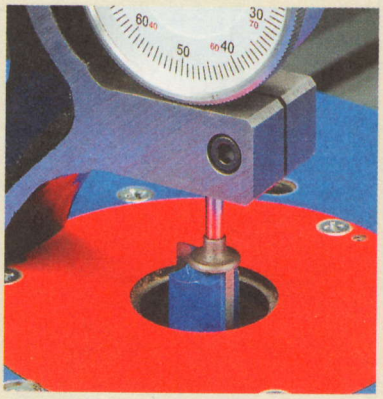

▲ The *Multi-Gauge* takes the guesswork out of setting the height of a router bit.

the *Multi-Gauge* to stand upright and stable, leaving you with both hands free to make adjustments.

The dial indicator supplied with the *Multi-Gauge* includes two tips — one that's machined flat and one that's round. The flat tip is useful when taking measurements off the top of a tool, while the round tip is great for reaching into the bottom of tight places. (You can also purchase after-market dial indicator tips for other measuring tasks.)

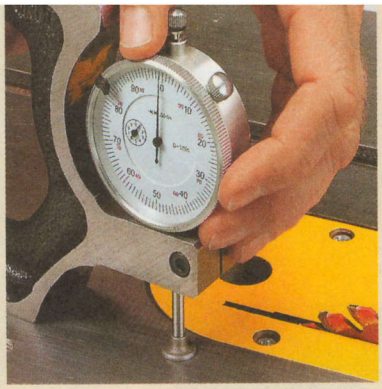

▲ To level an insert plate, start by zeroing out the dial indicator on the top of the saw.

▲ Then simply adjust the height of the insert plate until the dial indicator reads zero.

MULTI-GAUGE USES

The *Multi-Gauge* can be used in all sorts of ways, and the instructions that come with the tool offer several suggestions. Here's a look at some of the most common uses.

JOINTER SETUP. Adjusting the knives on a jointer can be among the most frustrating tasks in woodworking. But the *Multi-Gauge* makes it easy. All you need to do is place the *Multi-Gauge* on the rear (outfeed) table of your jointer and zero out the dial indicator. Then move the gauge forward so the flat foot of the indicator rests on one of the knives (main photo of opposite page). By taking measurements across the length of the knife, you can set it exactly flush with the surface of the outfeed table.

HEIGHT GAUGE. Using this same concept, the *Multi-Gauge* works great as a height gauge at the table saw or router table. With the flat foot of the indicator resting on the table, zero out the gauge. Then place the gauge so the indicator rests on your blade or bit (lower photo on opposite page). The dial indicator allows you to adjust the depth of cut with pinpoint accuracy.

LEVELING TWO SURFACES. You can also use the *Multi-Gauge* to level two adjacent surfaces, like the infeed and outfeed tables of a jointer, the extension wings of a table saw, or an insert plate, as shown above.

JOINERY. By adding a longer, extension tip to the dial indicator, you can also use the *Multi-Gauge* to measure the depth of grooves, dadoes, or rabbets (up to 1" maximum), as you see in the lower left photo. Or use it to check the alignment of your table saw fence (How-To box below).

Once you own a *Multi-Gauge*, you're certain to discover new ways to put it to use. For information on where to purchase one, see Sources on page 51. W

▼ The *Multi-Gauge* is also useful as a simple square to check the setting on tool fences.

▲ With an extension tip on the dial indicator, you can measure the depth of a groove.

How-To: Table Saw Fence Alignment

Although the *Multi-Gauge* isn't really suited for measuring distances, it does work great for *comparing* distances. And this quality makes it ideal for checking the alignment of a table saw fence with the saw blade. (To do this, you may want to use an extension tip on the dial indicator.)

Place the *Multi-Gauge* against your rip fence and slide the fence over until the tip of the dial indicator contacts the blade. By comparing readings taken at the front and back of the blade, you can determine if your fence is parallel with the blade. (Note: Make sure to rotate the blade so the dial indicator contacts the same tooth for each reading.)

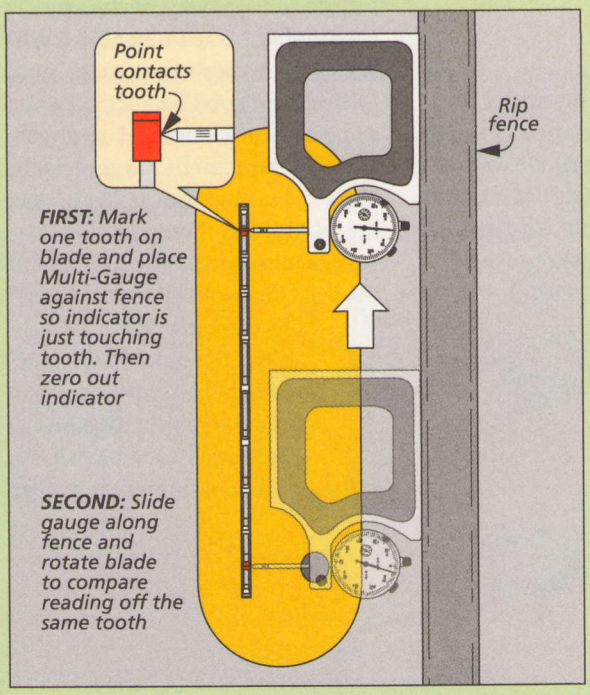

using Pocket Hole Joinery

Fast, accurate, versatile, and strong — do you need more reasons to give this joinery technique a try?

When it comes to designing and building projects, I've never been a woodworking purist. I usually don't worry too much about whether a joinery technique is considered "traditional." I try to focus on a more important goal — finding a good balance between appearance, structural strength, and efficient methods and techniques. In other words, will it get the job done and will it hold up?

This is one reason why I'm not the least bit reluctant to use pocket hole joinery when building a project. It's a quick, accurate, and reliable way to join the parts of a project together.

To reduce it to a basic level, pocket hole joinery is simply assembly using screws. But when you take a closer look, there's a bit more to it than appears on the surface. This level of sophistication and ingenuity is what makes pocket hole joinery such a valuable technique for a range of applications.

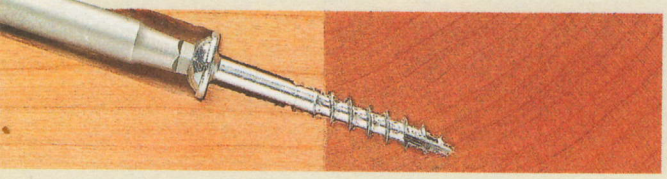

▼ A jig and a stepped drill bit (top) allow you to drill a custom hole for the pocket screw (bottom).

THE BASICS. In a nutshell, here's how it works. An angled pilot hole is drilled into the face of one of the mating pieces near the end. The shallow angle of the pilot hole allows the pocket screw to exit the end of the workpiece and enter the edge of the mating piece, pulling them tightly together. A quick glance at the two photos at left will give you the idea.

The key to this technique is the ability to drill the angled pocket holes accurately. This is accomplished with the help of a pocket hole jig. All you have to do is set up the jig to drill the pocket holes and then install the screws. The entire operation can be performed in a matter of minutes.

WHERE & WHY? Speed is just one of the benefits of using pocket hole joinery. Another advantage is versatility, as illustrated by the photos at the top of the opposite page. You can use it to join two pieces of wood in just about any configuration — end to edge, end to face, mitered — you name it. Consequently, the uses of pocket hole joinery in the construction of a project are almost unlimited.

Assembling structural frames and cabinet face frames is a common application. The side frames for the knock-down bookcase on page 24 are a good example.

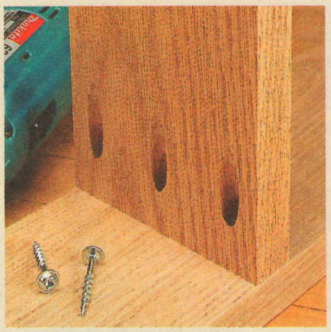

▲ Joining pieces in just about any orientation is easy with pocket screws.

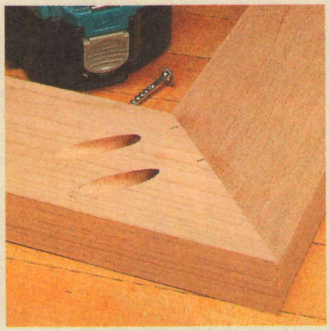

▲ With pocket screws, you can assemble a strong mitered frame in a snap.

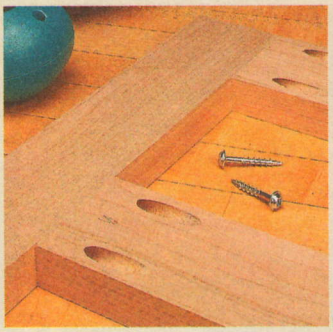

▲ Building face frames is one of the best uses for pocket-hole joinery.

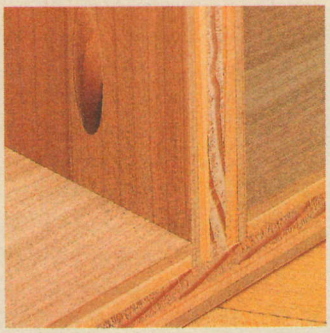

▲ Pocket screws can take the place of clamps in plywood case assembly.

Another plus is that the bond created is immediate. Although clamps are usually needed for assembly, once the screws are inserted, the clamps can be removed.

I like to take advantage of the self-clamping feature of pocket hole joinery by using it in conjunction with other types of joinery. The far right photo above shows how pocket screws can substitute for clamps as well as add reinforcement to standard case joints.

WHAT ABOUT STRENGTH? In terms of strength, a pocket hole joint performs quite respectably. Although generally not as strong as a mortise and tenon or a comparable glue joint, a pocket hole joint is the equal of many of the other "quick and easy" joinery techniques such as a biscuit joint, a loose tenon, or a stub tenon and groove.

The only real drawback to pocket hole joinery is that the oval-shaped pocket holes are visible on one face. However, in many instances, the holes can be drilled on an unseen face. Or if not, they can be disguised with special plugs.

THE JIGS. As I mentioned, what makes pocket hole joinery possible is the use of a specialized jig (and bit) to drill the holes. In order for the screw to make the connection, the pocket holes have to be drilled at a precise angle of 15° (margin photo on the opposite page). It isn't practical to attempt this freehand or even on the drill press. So basically, a pocket hole jig acts as a drilling guide. Depending on the style of jig you use, the workpiece is either clamped in the jig or the jig is clamped to the workpiece (box below). Then, a steel sleeve in the jig keeps the bit on track while drilling the angled hole.

THE BIT. A special stepped drill bit is used along with jig. As you can see in the margin photo on the opposite page, in one operation the bit drills a flat-bottomed counterbore for the head of the screw and short pilot hole for the shank.

The pocket hole accommodates a pocket screw (margin photo, opposite). These are hardened, self-tapping screws with a wide washer-head and deep threads. Even with fairly shallow penetration, a pocket screw provides a remarkable amount of holding power.

There are a handful of pocket hole jig makers, but one company — *Kreg Tool* — dominates this field. (A pocket hole jig is often simply referred to as a *Kreg* jig.) As anyone who's used a *Kreg* jig will confirm, their products are well-designed, well-manufactured, and consequently, very easy to use. They offer a range of models to suit any need from very basic to full-featured, as shown in the box below.

Jig Types: Simple to Full-Featured

Kreg makes a pocket-hole jig to fit just about any building need and budget. The basic, entry-level model shown at near right features just a single guide hole. To position the jig for drilling a pocket hole, you clamp it to the workpiece.

At the other end of the spectrum is the deluxe model shown on the far right. As you can see, this benchtop jig has the advantage of a built-in workpiece clamping system. It also features a three-hole guide block that can be quickly and easily adjusted to accommodate different thicknesses of workpieces.

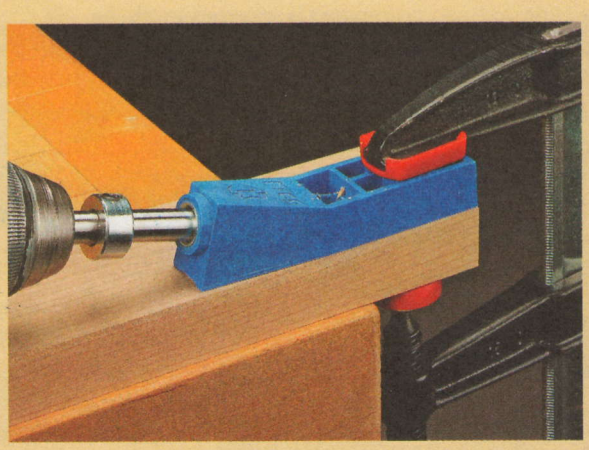

▲ This simple, one-hole jig is really all you need to get started with pocket hole joinery. It's very inexpensive as well as portable.

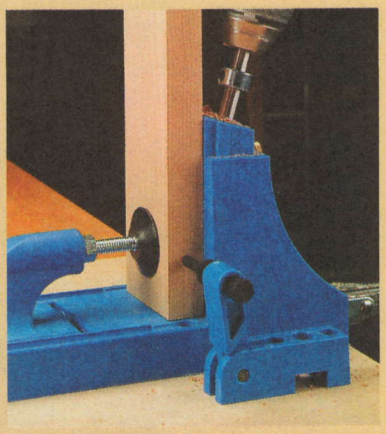

▲ This full-featured, "clamp-in" jig offers greater versatility and ease of use.

MAKING A POCKET HOLE JOINT

There are really two operations involved in making a pocket hole joint. First, you drill the pocket holes with the aid of the jig. The second stage is assembling the joint with the pocket screws. Both aspects are pretty straightforward. But each has a few fine points that deserve some discussion.

POCKET HOLE LAYOUT. Before you drill the pocket holes, you need to do a little planning. The first thing to think about is the orientation and layout of the holes. The drawing at left illustrates a few simple guidelines I like to follow.

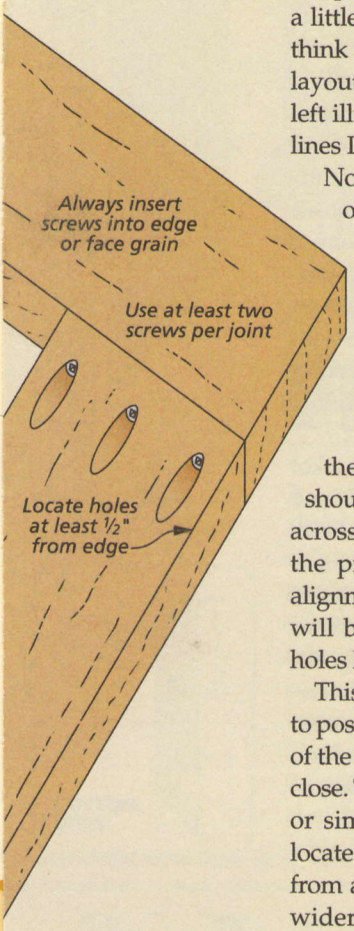

Layout. *The guidelines for laying out the pocket holes are few and simple.*

Notice that in the drawing (and other examples) the screws exit the end grain of one piece and enter the edge (or face) grain of the mating piece. This orientation of the joint gives the screws a better bite.

Whenever the width of the workpiece permits it, you should install at least two screws across the joint. This will prevent the pieces from twisting out of alignment. This anti-twisting affect will be greatest when the screw holes have a wide separation.

This often means that you want to position the holes near the edges of the workpiece. But don't get too close. To avoid splitting either piece or simply weakening the joint, I locate the holes no closer than ½" from an edge. In workpieces 3" or wider, additional screws spaced evenly between the outer screws will strengthen the joint.

SETTING UP THE JIG. For the best results, a pocket hole should be drilled so that its pilot section stops just short of the surface and the screw will exit near the center of the edge (drawings above). To get this right, you need to set up the jig and the drill bit properly.

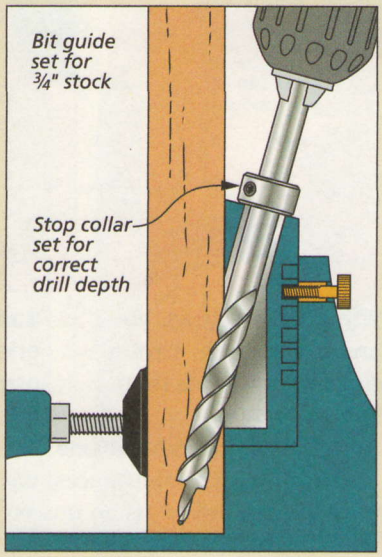

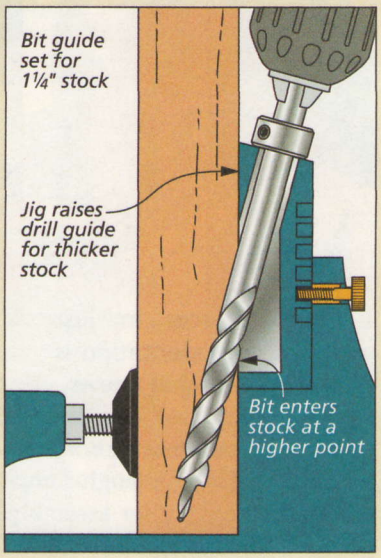

In most cases, the stock you're working with will be ¾" thick. Many of the jigs are designed around this fact. But when thicker or thinner stock is used, some jigs can be adjusted to drill a hole meeting the same requirements. Essentially, depending on the thickness of the stock, the guide holes in the jig need to repositioned so that the bit enters the face closer to or farther away from the end of the workpiece. This is shown in the two drawings above.

The newer model jigs are easily adjusted to accommodate different stock thicknesses. In other instances, a spacer is inserted in the jig or you simply rely on careful measuring and positioning of the jig.

As well as positioning the holes correctly, you need a way to drill them to the proper depth. This is accomplished with the help of a stop collar on the drill bit, as shown above. You either measure or use a set-up gauge provided with the jig to lock the collar at the correct spot along the bit shank.

Once the setup is completed, drilling the holes is routine. Your only concern here is to be sure to drill them to full depth.

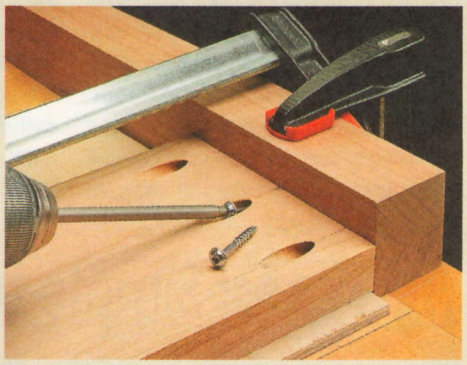

▲ Place a plywood spacer underneath the table apron rail to create the proper offset with the leg.

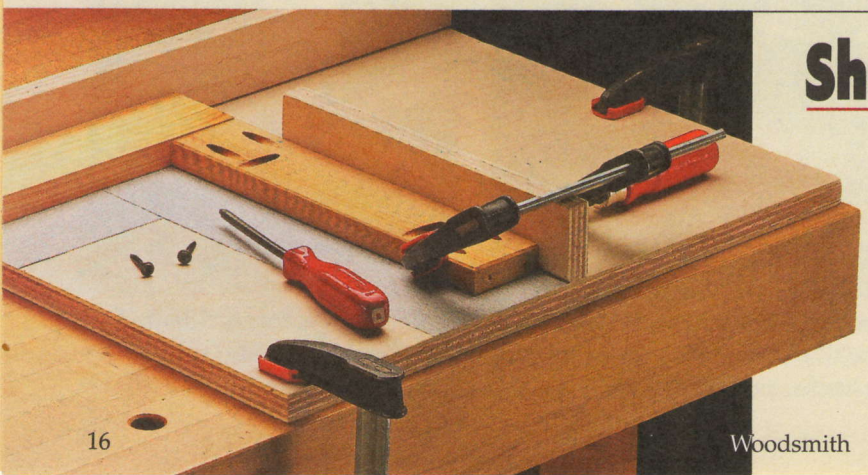

Shop Tip: Assembly Table

The simple assembly table shown at left can make the task of installing the pocket screws quicker, easier, and more consistent. The table is made up of a plywood platform with two fences attached at 90° to one another. The fences provide accurate alignment of the workpieces and also offer clamping options. Strips of adhesive-backed sandpaper applied to the platform also help keep the workpieces in place.

▲ ***Thread Type.*** Fine threads (top) work well in hardwoods, coarse threads (bottom) in softwoods.

▲ ***Head Style.*** Washer heads (top) are for general use. Pan heads are best (bottom) for very hard woods.

▲ ***Screw Length.*** Choosing the right screw length depends on the thickness of the workpieces.

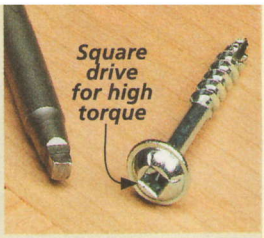

ASSEMBLY. One of my favorite aspects of pocket hole joinery is that assembly is generally easy and immediate. Unlike a traditional joint, there is no time wasted waiting for the glue to dry. When inserted properly, the screws play the role of both glue and clamps.

CLAMPS FOR ALIGNMENT. On the other hand, a pocket hole joint isn't self aligning. Until the screws are installed, there's no mechanical connection. So the first goal is to keep the pieces from shifting while the screws are inserted.

The method you use to keep the pieces aligned often depends on the type of joint you're assembling. When assembling a simple frame, you need to keep the surfaces flush as well as in the correct side-to-side position. Temporary clamping of the pieces is an obvious solution.

Sometimes a single clamp applied across the faces of the workpieces will do the job. Locking face clamps are available for this purpose (margin photo). Or standard clamps can be used. Clamping both pieces firmly to a flat surface will usually keep the pieces aligned.

At times, it's also helpful to apply a clamp across the two pieces to pull them together while the screws are driven (photo, opposite page). This will prevent the screws from bridging the pieces and causing them to shift out of alignment.

ASSEMBLY AIDS. There are occasions when you need more help than clamps alone can provide. The photo at lower right shows one situation. The mating piece in this T-joint is supported by a "backer" while the screws are installed.

Using a spacer is another way to guarantee consistent results when assembling pocket hole joints. The photo on the opposite page shows a good example.

And if you find yourself relying heavily on pocket hole joinery, you might want to build an assembly table like the one shown in the box on the opposite page. It can save you time and make the job go smoother and turn out better.

DRIVE THE SCREWS. The final assembly step involves driving the screws. But first you have to choose the right type for the application. The photos across the top of the page show the differences and give you guidance on your choice.

All pocket screws are self-tapping. And the deep threads tend to pull the screw aggressively into the wood and hold tenaciously. These two features along with a square drive head (photo above) mean that it doesn't require a lot of force to drive the screw.

A hand drill with a clutch is the ticket. I start with the clutch at a low setting and adjust up until the screw seats snugly.

PLUGS. That leaves only one detail. What if the screw holes are visible? The box below presents some options for dealing with this.

Once you try pocket hole joinery, I guarantee you'll be hooked. It's a great way to get great results with a minimum amount of work. W

▲ A locking face clamp will keep the faces flush while installing the screws.

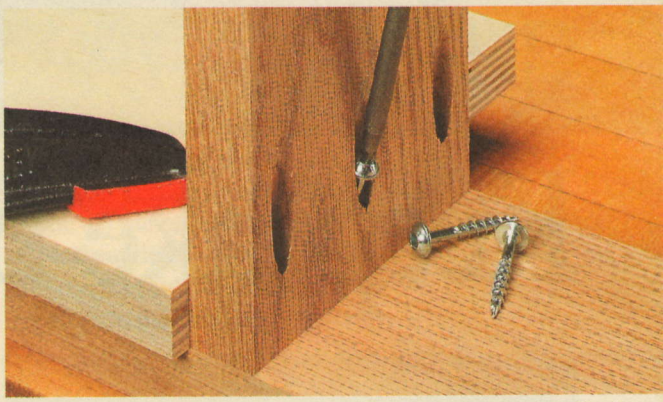

▲ Clamping this T-joint while the screws are installed would be tricky. A backer solves the problem.

How-To: Hide the Pocket Holes

▲ Tapered wood plugs can be glued into the pocket holes and then trimmed flush with the surface.

When the project design doesn't allow the pocket holes to be hidden, the next best option is to plug them. Wood plugs (left) can be purchased in a variety of common woods to match the wood in the project. Or you can use a contrasting wood. You simply glue them in place and trim them flush. The easy-to-use snap-in plastic plugs shown at right come in five different colors.

Plastic plugs are a good choice ► for filling pocket holes in melamine or painted surfaces.

quilt-top Keepsake Box

Choose from three eye-popping patterns to create a unique box.

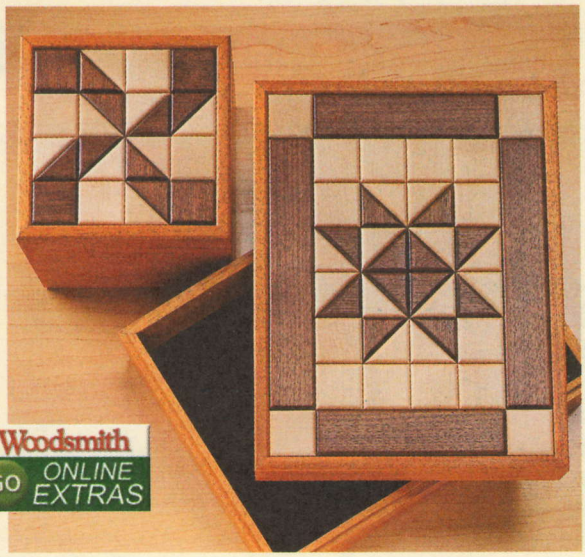

▲ Two other patterns are also available to build. You can find details about these patterns online at our web site *Woodsmith.com*.

Small boxes are always popular. And building one of these keepsake boxes is sure to challenge your woodworking skills. What makes them stand out is the lid. They're inspired by Early American quilts.

The "tumbling block" pattern on the box in the main photo and the star and pinwheel lids in the photo on the left are all replicas of centuries-old, hand-pieced quilts.

The quilted effect is created by assembling small wood blocks into a geometric pattern. Each shaped piece is cut from a different type of wood and laid into a recess in the lid so that the grain adds depth and distinction to the pattern. I used mahogany, walnut, and maple for the tumbling block lid and maple and walnut for the pinwheel and star box lids.

Building the box is pretty easy. Since the bottom and lid are built as one and then cut apart later, it goes together quickly. Arranging the pattern in the recessed top takes some time and a little patience, but it's well worth the effort when the box is complete.

Once the intricate patterns on your boxes are on display, they're sure to elicit questions about how you built them. You can tell the curious it's a lot like putting together a jigsaw puzzle. With a little time and careful fitting of the pieces, it's not that difficult to create beautiful boxes that remind you of your grandma's quilts.

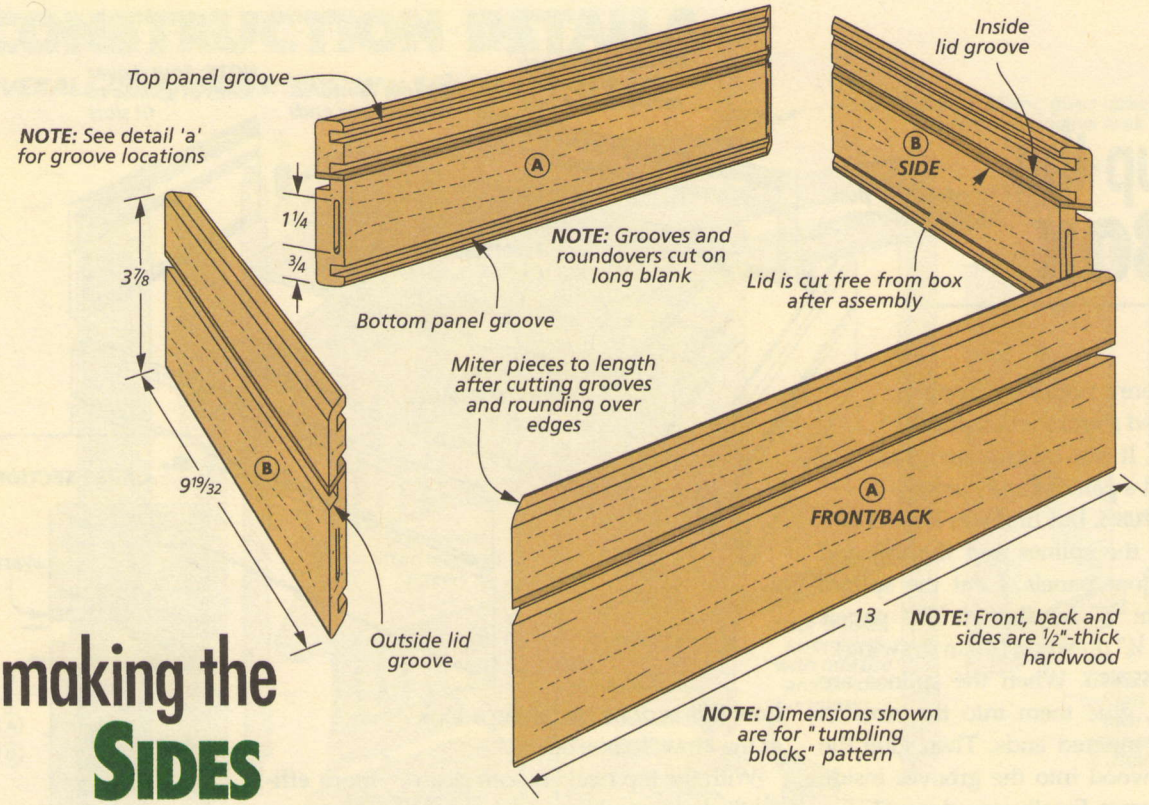

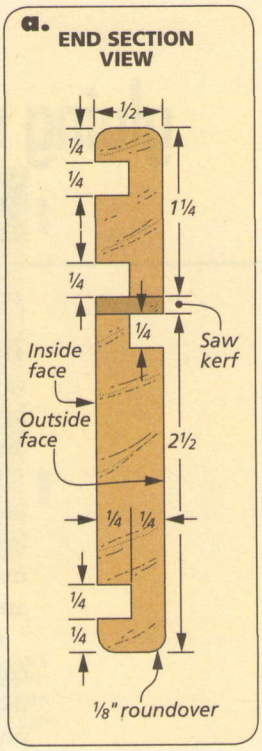

making the SIDES

Although all three of the boxes are a different size, the construction is the same. The box is a basic splined miter assembly with a recessed panel on the top and bottom set in grooves. Roundovers soften the edges of the box.

To ensure a perfect-fitting lid, you'll assemble the box as a single unit, then cut the lid free later.

LID GROOVES. To build the box, I started with an extra long (48") blank. After the blank is cut to initial width, you can turn your attention to the grooves that hold the top and bottom panels. Since the panels are cut from plywood, you'll want to size the grooves to match. In order to get a snug fit for the plywood panels, I used a standard blade in the table saw to sneak up on the perfect width for the panel grooves.

SEPARATING GROOVES. As you can see in detail 'a,' there are two more grooves on the opposite faces of the blank. These are cut now so that when the lid is separated later, they'll form mating rabbets to hold the lid on the box. I located the two grooves 1/8" apart so that I could use a standard saw blade to separate the two sections. I'll explain more about this later.

ROUNDOVERS. Now you're ready to rout the roundovers on the edges of the blank. There's no more to this than setting up for the task on your router table (detail 'a').

END MITERS. For a box to be square, the opposite sides need to be the same length. A good way to ensure that they are is to use a stop block with your miter gauge while mitering the pieces to length.

SLOTS & SPLINES. The miter joints that join the box are reinforced with hardboard splines that fit in stopped slots. I built a simple jig to help rout the slots. You can read more about it in Shop Notebook on page 30. When you're finished building the jig there are details on using it in the Shop-Tip box below.

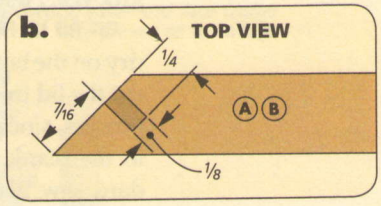

To complete the assembly of the box, you'll need to cut the top and bottom panels and the splines. Then, you'll be on your way to fitting the "quilted" top.

Shop Tip: Routing the Slots

When it came time to rout the stopped slots for the splines, I set up two stop blocks on the router table.

To cut the slots on one side of the box miters, position the stop blocks as shown in detail 'b' on the right. Plunge the mitered end straight down on the bit and then let it rest on the support as you guide it over the bit.

For the opposite ends, just mirror the same set up. You'll move this piece in the opposite direction.

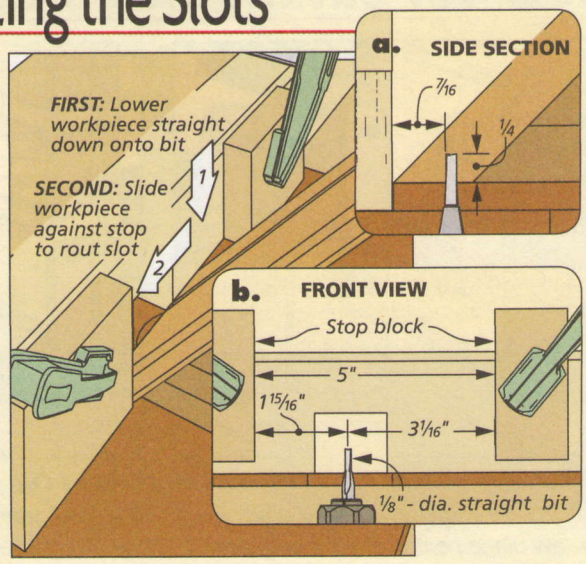

gluing up the Box

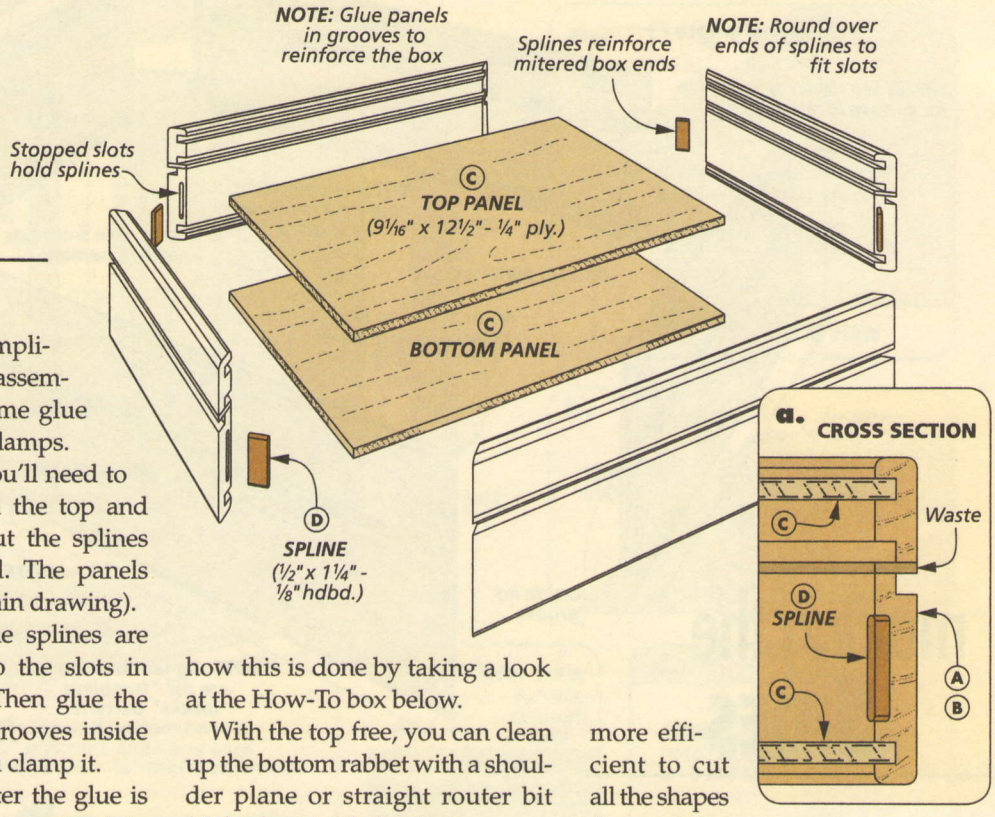

There's nothing complicated about the box assembly. It just takes some glue and a pair of band clamps.

SPLINES. But first you'll need to cut the splines and the top and bottom panels. I cut the splines from 1/8" hardboard. The panels are 1/4" plywood (main drawing).

ASSEMBLY. When the splines are cut, glue them into the slots in the mitered ends. Then glue the plywood into the grooves inside grooves. Finally you clamp it.

CUT THE LID FREE. After the glue is dry on the box, your next step is to cut the lid free. It's a pretty simple process, since you cut the grooves in the blank earlier. With a standard saw blade in the table saw, set the fence to cut a kerf on the waste line, as shown in detail 'a'.

You'll find it easier to control the box if you cut the long sides first. Once these cuts are complete, tape spacers in the kerf to prevent the box from pinching the blade when you cut the ends. You can see how this is done by taking a look at the How-To box below.

With the top free, you can clean up the bottom rabbet with a shoulder plane or straight router bit (right drawing below).

CREATING THE PATTERN

After you've completed the basic box you can turn your attention to the interesting part of the project — the quilt pattern.

All the blocks in the pattern are 1 1/2" wide, so I cut extra long blanks from the three wood varieties I chose to use in the pattern. There are several different sizes and shapes of the blocks needed. I found it more efficient to cut all the shapes first and then fit them into the top.

SLED. The blocks in the pattern are fairly small. In order to cut these safely, I built a simple sled. It's just a 1/4" hardboard base glued to an auxiliary miter gauge fence. A strip of adhesive-backed sandpaper keeps the workpiece in place. The miter gauge is set at different angles to the blade. You can see what I mean in the box on the opposite page.

How-To: Cut the Lid Free

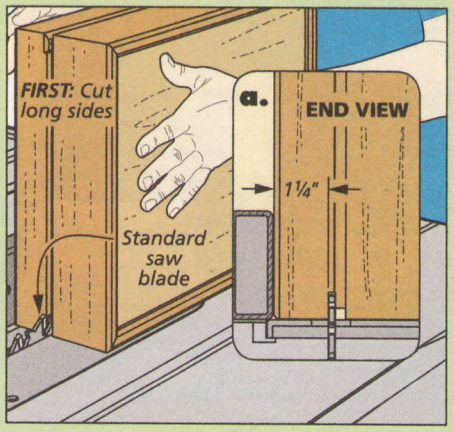

First Cut. *To free the lid from the box the first cuts are made on the long sides. Align the saw blade next to the outer groove.*

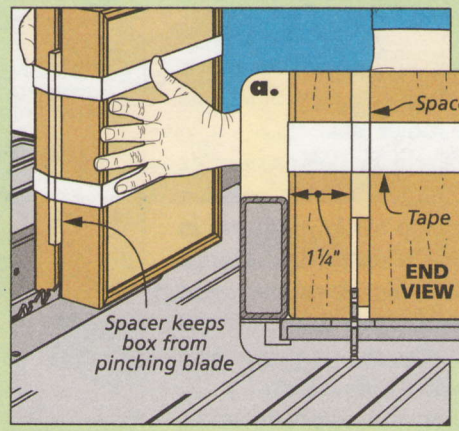

Second Cut. *Before you make the cuts on the short sides of the box, tape spacers in the long sides to hold the lid firmly.*

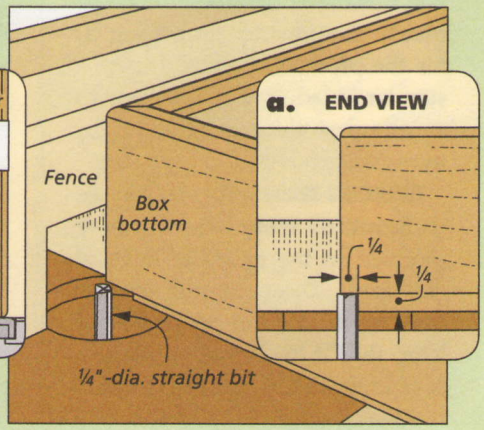

Clean Up. *The lid should fit snug, but not too tight. Use a straight bit to fine-tune the rabbet for a perfect fit.*

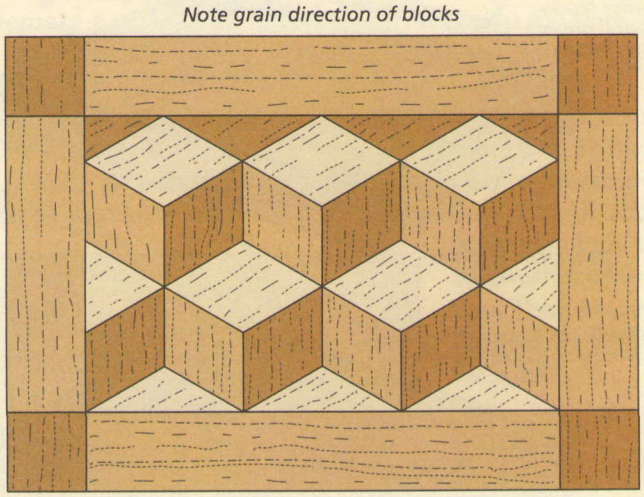

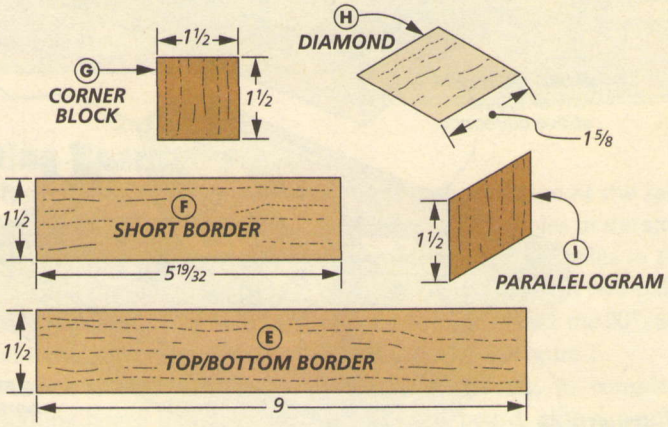

BORDER BLOCKS. Your first task is to cut the pieces that make up the outer border. I cut the square corner blocks to length first, using the miter gauge and a stop block clamped on my rip fence. Then I cut the side pieces to length.

TUMBLING BLOCKS. The inner field of the pattern is made up of alternating rows of diamond-shaped and parallelogram-shaped blocks. The two shapes are cut with the miter gauge at the same setting. You'll arrive at the two different shapes by moving the rip fence to cut each one at a different length, as shown in the How-To box at right.

DIAMONDS. To cut the blanks into diamond shapes, I mitered one end of the blank and then clamped a stop block to my rip fence. This ensures that all the blocks are cut to the same size (detail 'a,' top, right drawing). You'll need 10 maple diamonds and four walnut diamonds. But it's a good idea to cut a few extras. With the diamonds complete, I turned my attention to the parallelograms.

PARALLELOGRAMS. Now that the diamonds are cut, you can reposition the rip fence to cut the parallelograms from the contrasting wood species. These blocks are slightly shorter than the diamonds, as shown in detail 'b' of the top right drawing. There are an equal number of walnut and mahogany blocks — six of each. But again I cut some extras to have on hand.

PARTIAL BLOCKS. If you take a look at the main drawing you'll see that the edges of the pattern are completed with partial blocks. These little blocks are cut down from whole diamond blocks, as shown in the lower three drawings on the right. Six of the diamonds are cut lengthwise, two are cut crosswise and two more are cut to a quarter of the original shape.

How-To: Cut Blocks

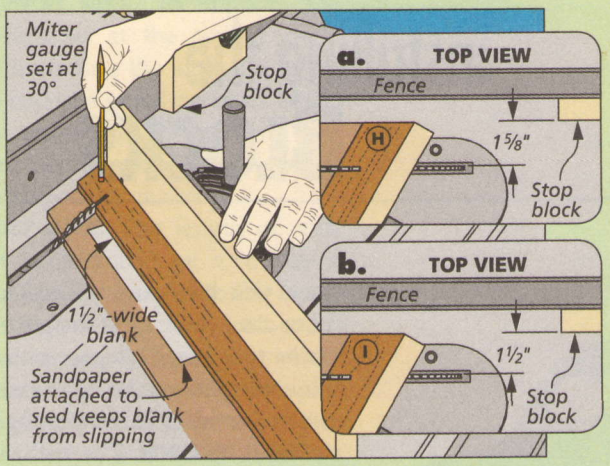

Mitered Blocks. *The diamond and parallelogram blocks are cut with the miter gauge set at 30°. Note the rip fence setting is different for the two cuts.*

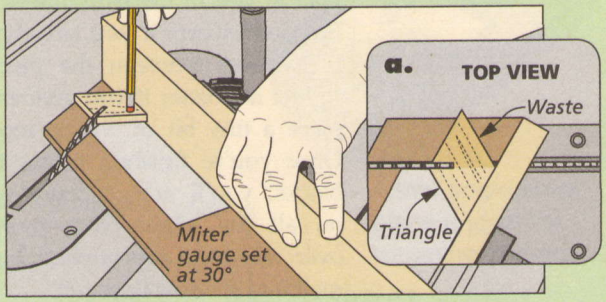

Triangle. *The triangles are cut from a diamond. Be sure to mark the centerpoint and cut on the waste side. A pencil helps hold the small pieces.*

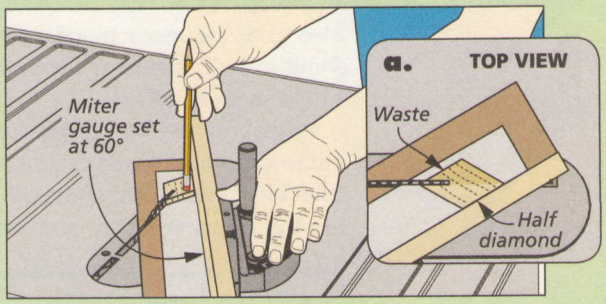

Half Diamond. *The half diamond is cut with the miter gauge set at 60°. You may need to reposition the sled on your miter gauge for this cut.*

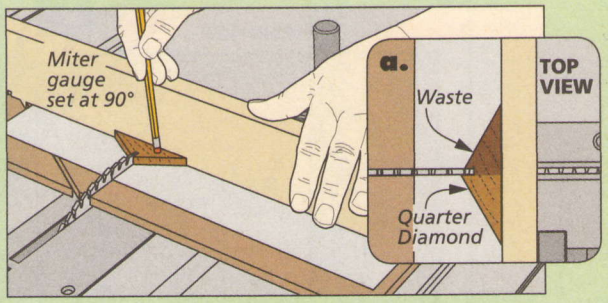

Quarter Diamond. *The quarter diamond blocks are cut from a half diamond. Only one block can be cut from each diamond. The rest is waste.*

installing the BLOCKS

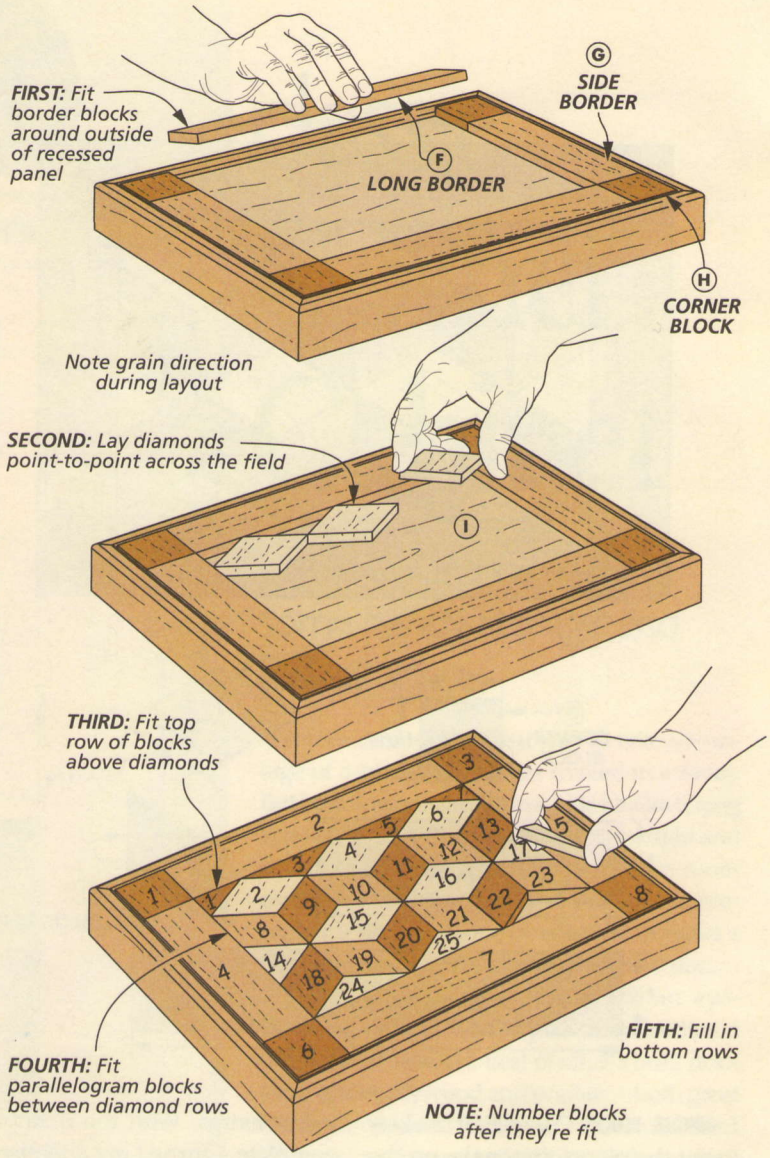

Once you have the workpieces cut to size, you can fit the pattern blocks together. This process will take some patience, so be prepared to spend some time completing it.

ASSEMBLE THE BLOCKS. The hallmark of a well-pieced quilt pattern is one where the corners of the pattern line up perfectly. That's your goal as you fit the pattern blocks. But don't worry if you have hairline spaces between the pieces. In fact it's better if you give each piece a tiny bit of wiggle room. Once you're finished fitting the blocks, you'll add a roundover on all the edges. This roundover will help any imperfections melt into shadow lines.

THE BORDER. I fit the outside border blocks before the inside for two reasons. First, all the cuts are square, so it's an easy fit. But they also give the inner blocks something to butt against while you're fitting them in the lid.

When you have the border blocks cut to size, check to make sure that each block fits. If any of the pieces are too large, you can trim them using a shooting board and a block plane, as shown in the How-To box below. If you don't have a shooting board, you'll find a simple plan for one on page 31.

FIT THE BLOCKS. As you begin to fit the inner blocks together, you'll notice that some pieces may be a little long. You can trim these pieces to fit on the shooting board too. Like before, make light passes on two edges of the block and then check the fit. As you fit each block, be sure to pay attention to the direction of the grain.

I started by connecting the points on the top row of maple diamonds. If the blocks shift around too much, you can place a small piece of double-sided tape on the bottom. After I had them laid out, I fit the walnut blocks across the top of the box. Next up, I fit a row of walnut and mahogany parallelogram blocks. Then I finished out the maple and fit the last row of walnut/mahogany. All that's left are the half diamond blocks across the bottom.

How-To: Shooting Board

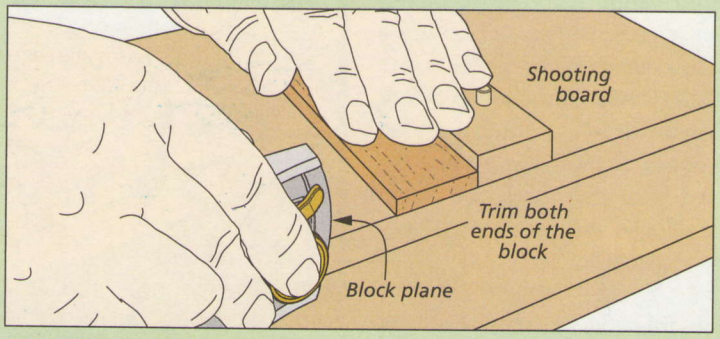

Shooting Board. *A shooting board is used to trim the blocks to fit. It's especially good at trimming end grain. You can find out more about the shooting board in Shop Notebook on page 30.*

You may find as you fit each row of blocks, that you have to make a few more passes on the shooting board to get the pieces to fit. But don't give it a second thought. You won't be able to see the difference when the blocks are in place. After the blocks are fit into place, it's a good idea to number each one before you take them out to rout the roundovers on the edges.

ROUNDOVERS. I used the jig shown in Figure 1 along with a 1/8" roundover bit to rout the edges on the router table. The jig is just two pieces of 1/4" hardboard glued together. I drilled a hole in the center slightly larger than the bearing of my roundover bit. Then after attaching the jig to my router table with some double-sided tape, I slowly raised the bit up through the hole to create a zero-clearance opening. The edge of the top layer of hardboard should be flush with the bearing on the bit.

The pieces you're routing are small, but there's not much of the bit exposed between the layers of the jig, so it's safe to guide the blocks past the bit by hand. I also found it works best to rout the end grain first and then rout the long grain. I did this to clean up any minor tearout on the corners.

GLUE UP. When you've finished routing the blocks, refit them in order. Then, remove them one at a time and lightly sand away the pencil marks. After you add a drop of glue to the back, press the block down in place and move on to the next one in the sequence.

FINISH. Once the glue is dry, all that's left is to add the finish and a liner. There's more information about the finish I used in Sources on page 51. And to line the bottom of the box, I used some adhesive-backed felt. For a perfect fit, cut a piece of 1/8" hardboard to fit inside the box. Then attach the felt to the hardboard, trim the edges, and slip it in place (Figure 3).

Completing a box with an intricate pattern like this is an exercise in patience. But when you're finished the box is sure to gain high marks from admirers. W

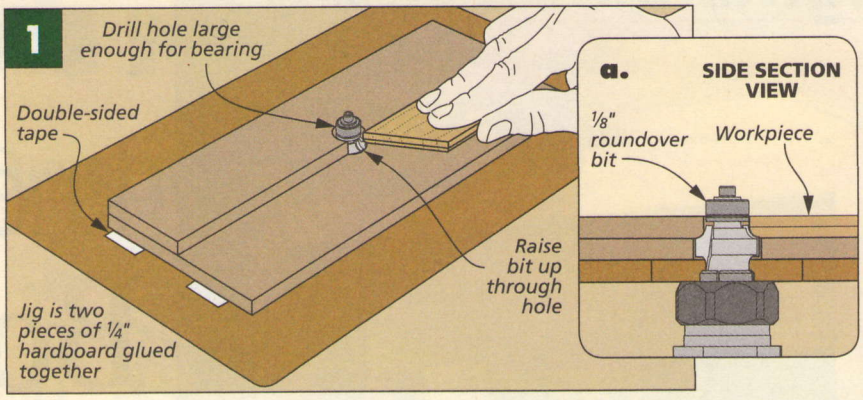

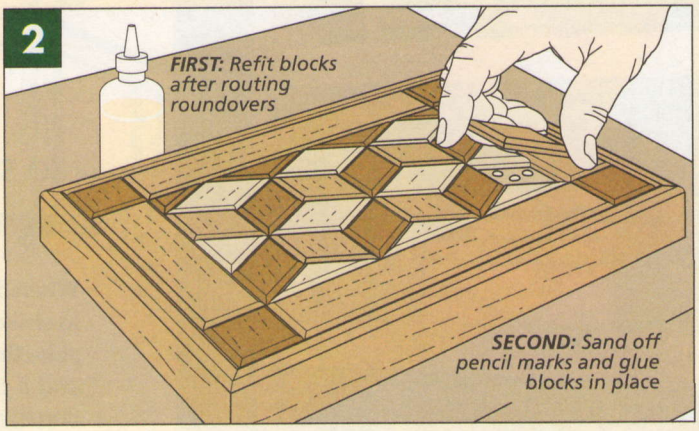

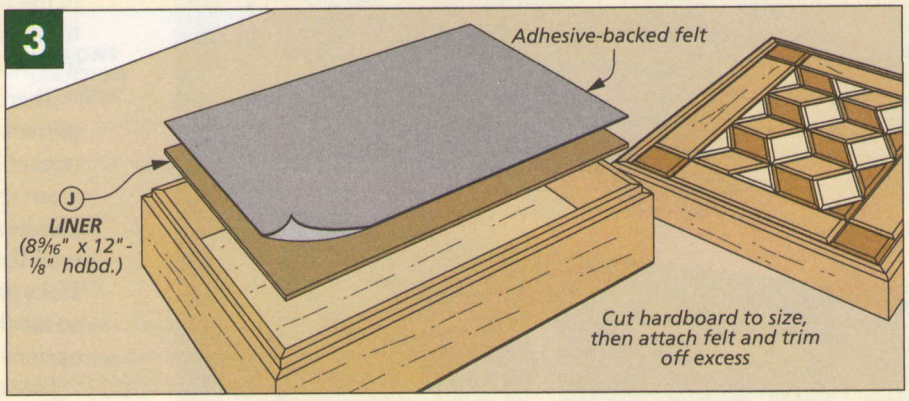

Materials, Supplies & Cutting Diagram

A	Box Front/Back (2)	1/2 x 3 7/8 - 13	G	Corner Blocks (4)	1/4 x 1 1/2 - 1 1/2
B	Box Sides (2)	1/2 x 3 7/8 - 9 19/32	H	Diamonds (14)	1/4 x 1 1/2 - 1 5/8*
C	Top/Bot. Panels (2)	1/4 ply. - 9 1/16 x 12 1/2	I	Parallelograms (12)	1/4 x 1 1/2 - 1 1/2*
D	Splines (4)	1/8 hdbd. - 1 1/4 x 1/2	J	Liner (1)	1/8 hdbd. - 8 9/16 x 12
E	Front/Back Borders (2)	1/4 x 1 1/2 - 9	•	(1) Adhesive-Backed Felt	
F	Side Borders (2)	1/4 x 1 1/2 - 5 19/32	*	measured across one edge	

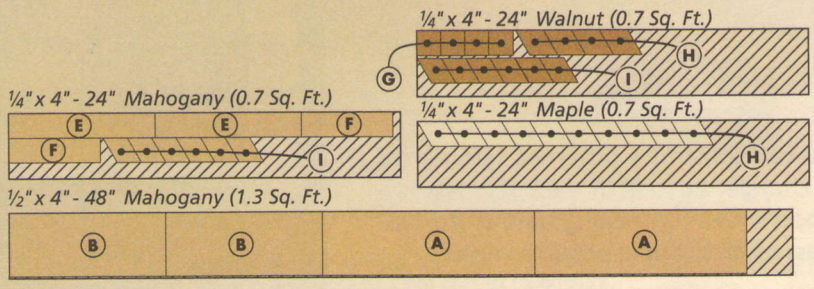

Also needed: 24" x 24" sheet of 1/4" Birch plywood
24" x 24" sheet of 1/8" Hardboard

knock-down Bookcase

This attractive bookcase proves you don't have to sacrifice style in favor of straightforward construction.

When designing a project, it's often difficult to strike the right balance between manageable, time-conscious construction methods and a pleasing appearance. Often a functional, easy-to-build project comes up short in the visual appeal department. However, I think you'll agree this stylish bookcase gets it right on both counts.

There are a couple of keys to achieving this perfect compromise. First, a combination of pocket hole joinery and knock-down hardware make the basic assembly quick and painless, yet very sturdy. Add to this a few well-thought-out details and the end result looks pretty impressive. In fact, this design is so flexible, it lends itself to some interesting options (photos below and page 29).

I see only one downside. When the project is completed and the compliments start rolling in, you might feel the need to confess all the details. My advice is to keep quiet.

You can substitute different side panels ► to change the look of the bookcase. Plywood with a contrasting stain or frosted-glass offer a couple possible choices.

CONSTRUCTION DETAILS

OVERALL DIMENSIONS: 36½"W x 15"D x 66¼"H

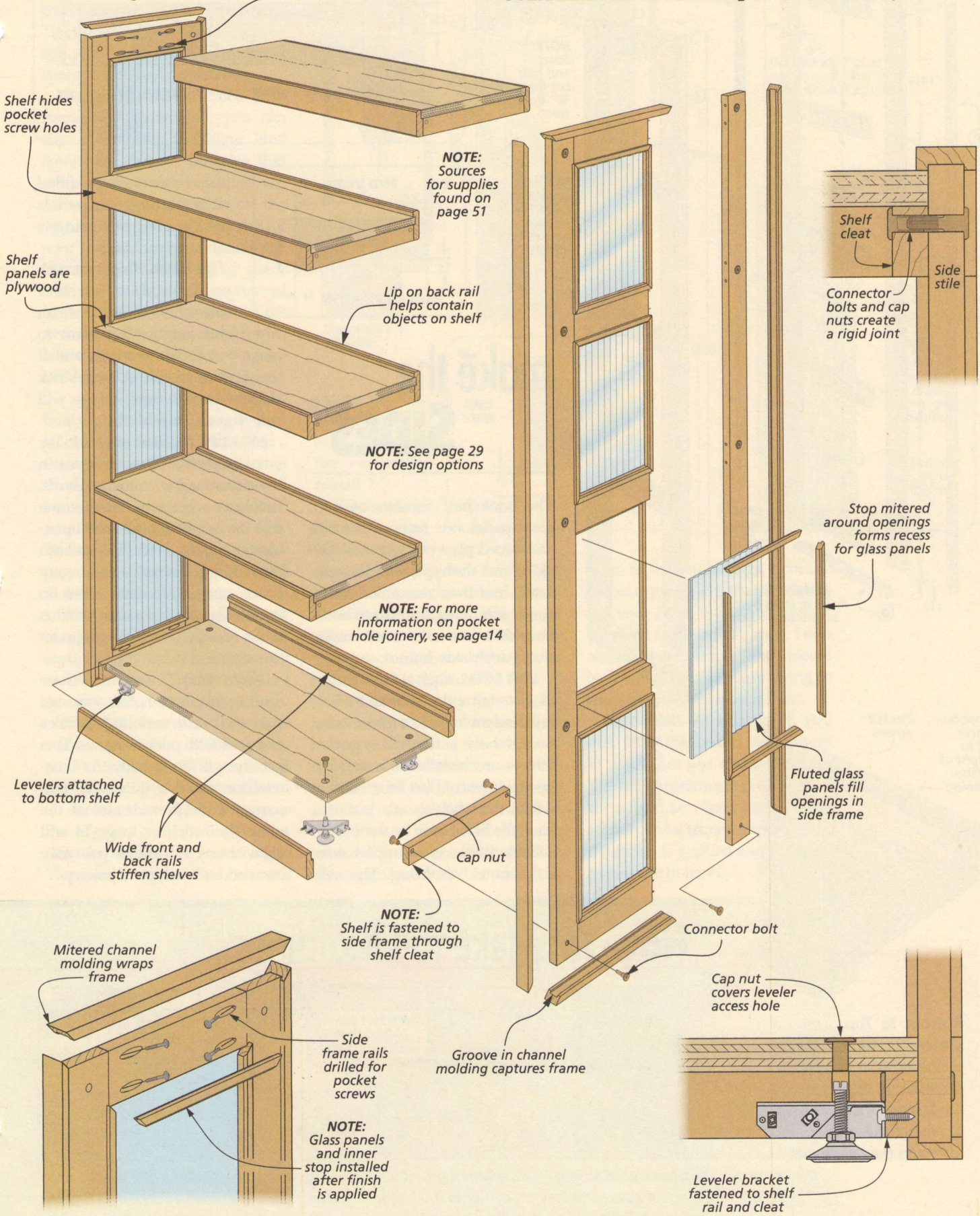

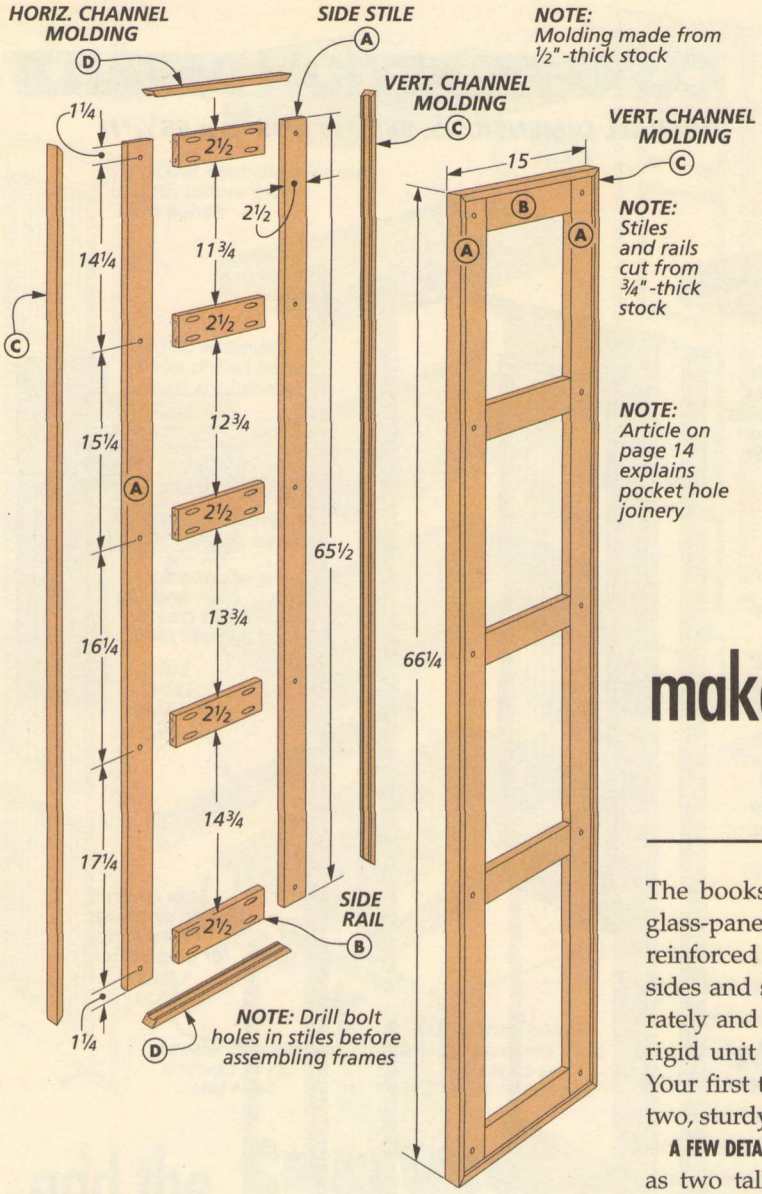

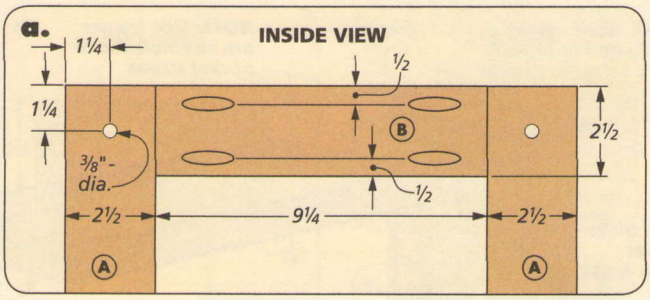

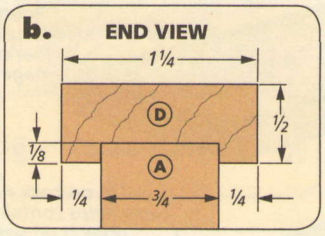

make the SIDES

The bookshelf consists of two, glass-panel side frames and five reinforced plywood shelves. The sides and shelves are built separately and then assembled into a rigid unit with connector bolts. Your first task is to construct the two, sturdy side frames.

A FEW DETAILS. Each side starts out as two tall stiles and five short rails assembled into a frame using pocket hole joinery. The pocket screws are installed through the inside faces of the rails so that when the shelves are installed later, the holes can't be seen.

Each frame is wrapped with a "channel" molding. The side frame openings are filled with fluted glass panels held in place with simple rabbeted moldings.

THE FRAMES. To get started, you'll need to cut four stiles and ten rails to width and length. You want to make certain that the rails are all identical in length. A stop block clamped to the miter gauge will help you accomplish this.

BOLT HOLES. The next step is to lay out and drill a series of holes in the stiles for the connector bolts. Before you get to it, let me note that the heights of the shelf openings are graduated. This means the rails and the bolt holes are not evenly spaced along the stiles. So double-check your measurements when marking for the holes (main drawing and detail 'a').

POCKET HOLES. Once you're done drilling the bolt holes, you can start work on assembling the stiles and rails with pocket screws. This joinery will go quickly. As illustrated in detail 'a,' I installed two screws through each end of the rails. The article on page 14 will answer any questions you may have about this type of joinery.

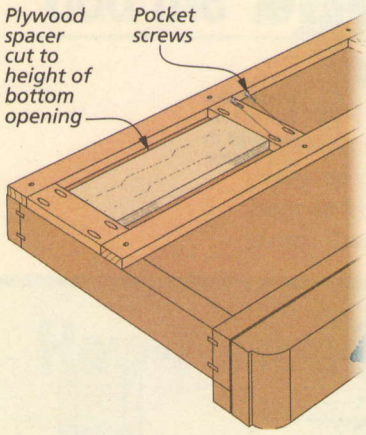

Bottom to Top. *I used a spacer cut to the height of the bottom opening to position the second rail on the frames. Then work up, trimming the spacer and fastening the rails in order.*

How-To: Make the Moldings

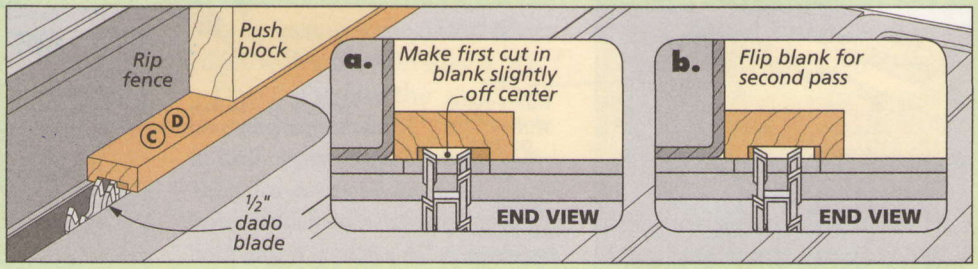

Channel Molding. *Position the rip fence to locate the cut slightly off center in the blank. Make a pass, flip the blank end-for-end, and make a second pass. Check the width of the groove, then tweak the fence setting and repeat until the fit over the frame is snug.*

You want the rails to be located accurately along the stiles and consistently from frame to frame. The tip in the margin of the opposite page shows how a plywood spacer helps accomplish this.

THE CHANNEL MOLDING. Once both frames are assembled, you can start adding the moldings. First comes the channel molding that wraps the outside of each frame.

If you look at detail 'b' on the opposite page, you'll see why I refer to this as a channel molding. It's simply a rectangular piece with a ¾"-wide groove or channel cut into one face. The channel fits over the outside edge of the frame, allowing the molding to be positioned and secured easily.

I started by cutting blanks to final width and rough length from ½"-thick stock. Then, I installed a dado blade in the table saw to cut the grooves. The groove should be centered across the blank and sized for a snug fit over the frame. The How-To box on the opposite page shows the technique I used to meet both goals.

With the channel molding completed, you can miter pieces around the frames. I did this by working around the frame fitting and installing one piece at a time.

GLASS STOP. The next task is to make and fit the molding that retains the glass. The profile of this glass stop is shown in detail 'a.' A rabbet allows it to wrap over the edges of the openings and a chamfer softens the inside edge. The glass is sandwiched between pieces of stop mitered around both sides of the openings (detail 'b').

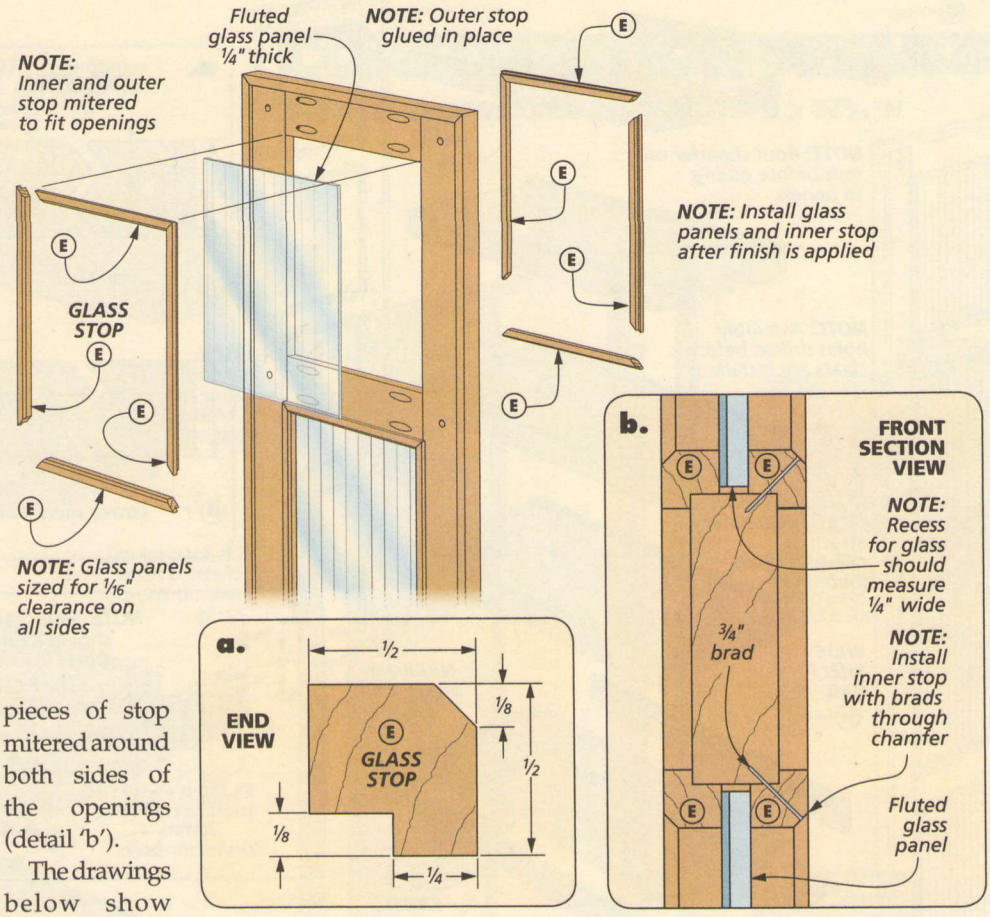

The drawings below show how I made the small stop pieces safely. The simple trick is to start with extra-wide blanks. After cutting a groove down the center and a chamfer along each edge, the blank can be ripped into two pieces.

MANY MITERS. Now, you have a lot of miters to fit. Fortunately, there's a way to streamline the job.

If your side frames were built carefully, all the horizontal pieces of stop should be identical in length. And the vertical pieces needed for each different size opening should also be identical. So to fit these moldings, I cut the pieces to rough length and mitered one end. Then, using a stop block clamped to the miter gauge, I was able to miter all the "like" pieces to final length without having to measure and mark each one.

OUTSIDE ONLY. At this point, you can glue the outer stop pieces in place. But just check the fit of the inner moldings pieces, label them, and set them aside. These pieces can be tacked in place once the finish is applied and the glass panels are in hand.

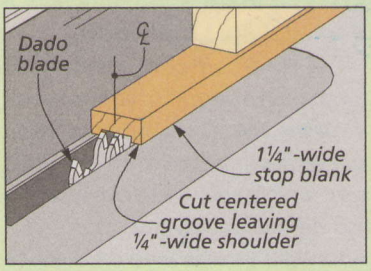

Glass Stop. *First, I cut a centered groove with the same technique shown on the opposite page.*

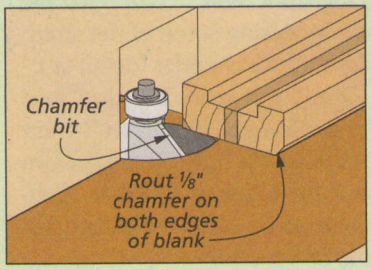

Chamfers Next. *The wide blank makes it much easier to rout the chamfers at the router table.*

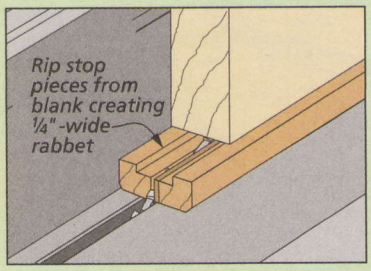

Finished Size. *When you rip the stop to size, make sure the resulting rabbet measures ¼" wide.*

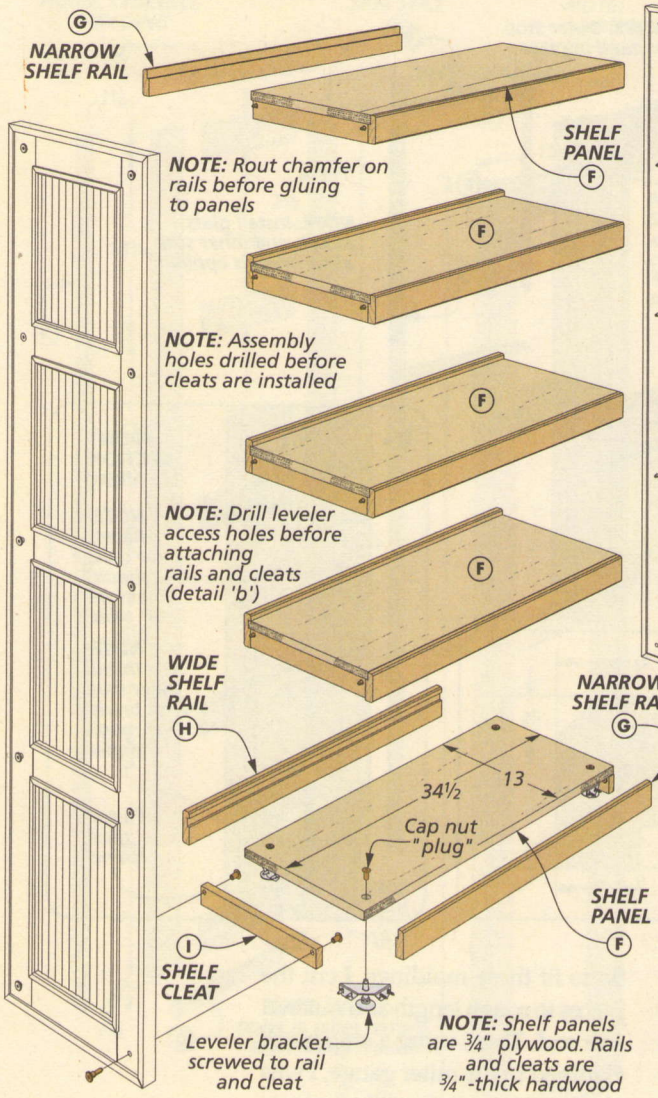

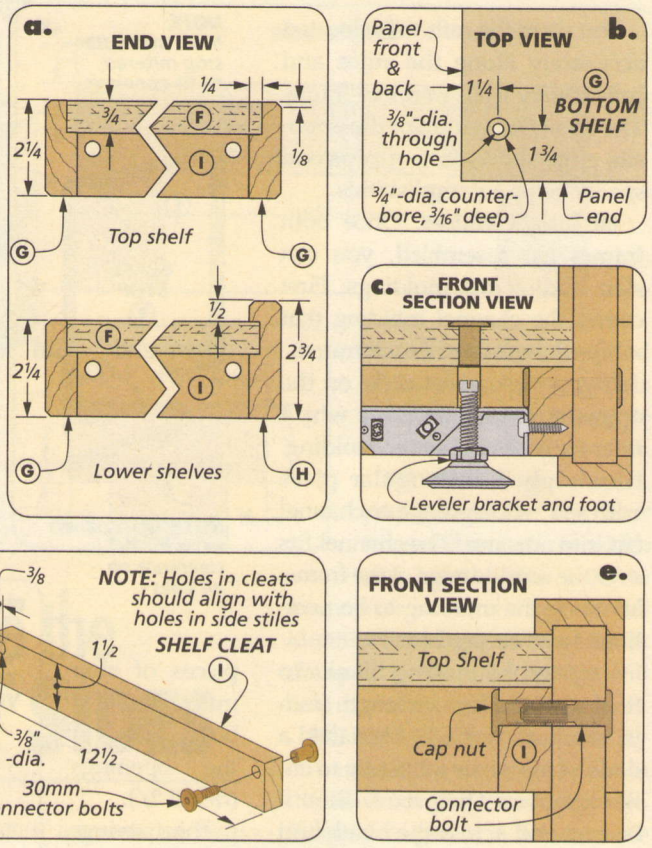

add the SHELVES

Aside from a couple of minor details, the construction of the five shelves is identical. Each shelf is made up of a plywood panel, a front and back rail, and two side cleats. The front rail is rabbeted to wrap around the edge of the plywood panel. The back rail of the four lower shelves is wider to create a lip and captures the shelf panel in a groove (detail 'a'). The cleats fit between the front and back rails and serve as anchor points for the connector bolts.

A BRIEF STEP-BY-STEP. When making the shelves, keep one important goal in mind. You want to size them for a "close" fit between the channel moldings as well as the inner glass stop.

THE RAILS. After cutting the shelf panels to size, I worked on the rails. The rabbets and grooves should be sized to the thickness of the plywood. And note that the top shelf back rail is identical to the front rails. I completed the rails by easing some of the sharp edges with a chamfer (detail 'a').

Don't get out the glue and clamps just yet. First, you'll want to drill access holes in the bottom shelf for a set of levelers. Each hole consists of a ⅜"-dia. through hole and a shallow ¾"-dia. counterbore, as shown in detail 'b'. The counterbore holds a cap nut that serves as a plug.

THE CLEATS. Once the rails are glued to the shelf panels, the cleats can be made and installed. The cleats hold the cap nuts that mate with the connector bolts (detail 'e'). So assembly holes need to be drilled through the cleats before they're glued to the shelves.

The holes in the cleats should align very closely with those in the side frames. Detail 'd' gives you the dimensions you'll need.

ALMOST DONE. One detail will complete the job. Before taking the parts into the finish room, I installed the leveler brackets on the bottom shelf (detail 'c').

FINAL ASSEMBLY. Once the finish is dry, the glass can be installed. The stop is ready and waiting so all you need to do is carefully tack it in place. (I used a pin nailer.)

The How-To box at left shows a good way to support the bookshelf while installing the connector bolts. Just remember that you'll need to have all five shelves in place before adding the second side.

Now all you have to do is move the bookcase to its appointed spot. But that shouldn't be a problem. It's knock-down — right? W

How-To: Assembly

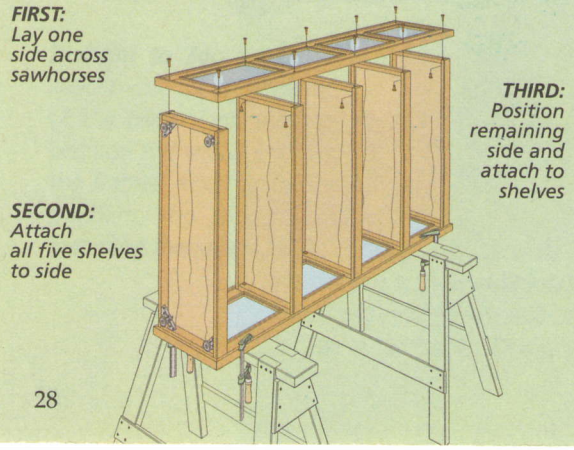

DESIGNER'S NOTEBOOK

A Flexible Design

The basic design of the bookcase can easily be adapted to fill different needs or spaces. The drawing at right shows one interesting option.

In this configuration, two short bookcase units are connected by a couple of additional shelves to form a simple, low-profile entertainment center. The construction methods and techniques for all the individual parts and assemblies are identical to those used on the tall bookcase — only the dimensions will need to be changed to meet your particular requirements.

The final assembly is very similar. The detail drawing shows how the two units and the center shelves are fastened together using slightly longer connector bolts.

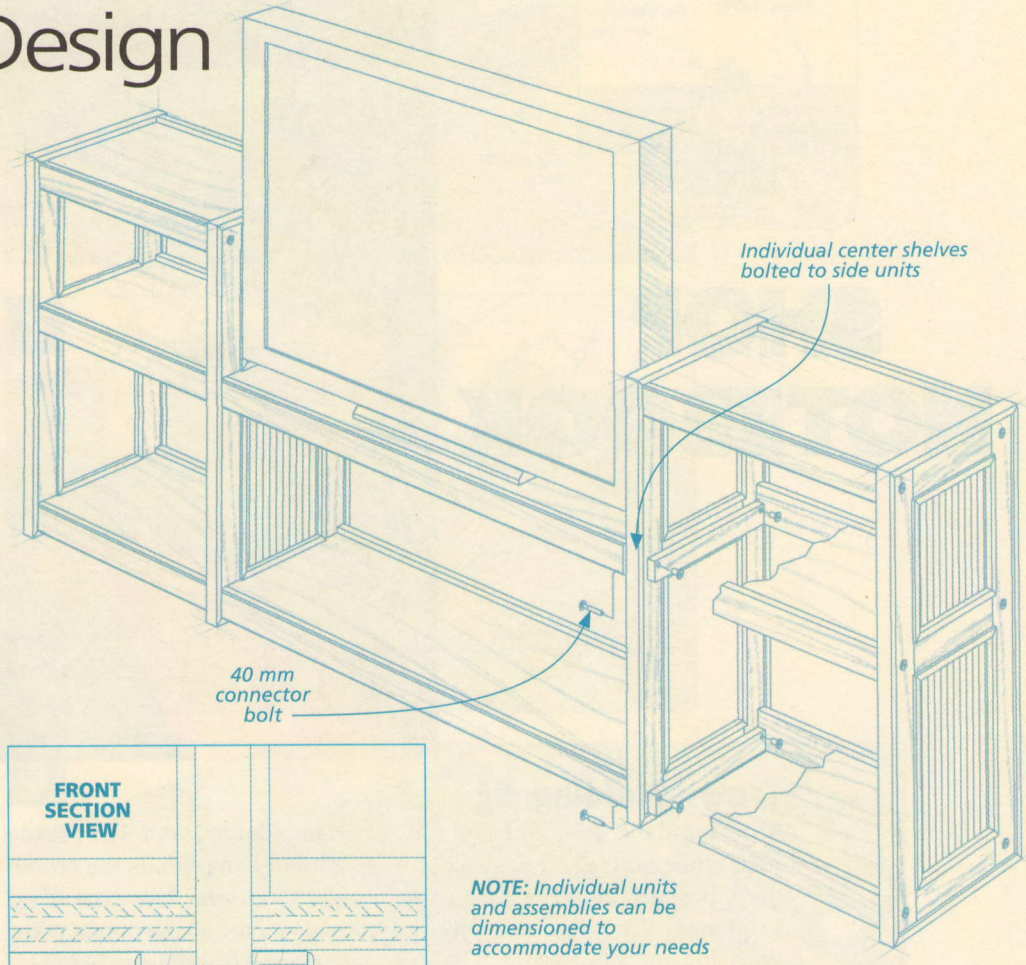

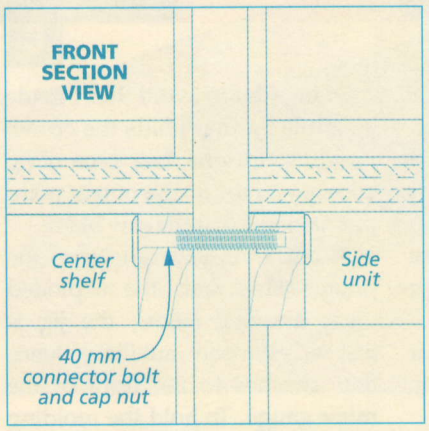

NOTE: *Individual units and assemblies can be dimensioned to accommodate your needs*

NOTE: *Modified configuration uses construction techniques identical to bookcase*

Materials, Supplies & Cutting Diagram

A	Side Stiles (4)	3/4 x 2 1/2 -65 1/2
B	Side Rails (10)	3/4 x 2 1/2 -9 1/4
C	Vert. Channel Molding (4)	1/2 x 1 1/4 - 66 1/4
D	Horiz. Channel Molding (4)	1/2 x 1 1/4 - 15
E	Glass Stop (1)	1/2 x 1/2 - 64 lin. ft. rgh.
F	Shelf Panels (5)	3/4 ply.- 13 x 34 1/2
G	Narrow Shelf Rails (6)	3/4 x 2 1/4 - 34 1/2
H	Wide Shelf Rails (4)	3/4 x 2 3/4 - 34 1/2
I	Shelf Cleats (10)	3/4 x 1 1/2 - 12 1/2

- (20) 30mm Connector Bolts
- (24) Cap Nuts
- (4) Leveler Corner Brackets
- (4) Leveler Feet
- (8) Fluted Glass Panels (sized to fit openings)

3/4" x 6" - 96 Red Oak (Two boards @ 4 Bd. Ft. each)

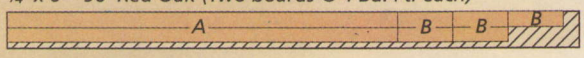

3/4" x 6" - 96 Red Oak (4 Bd. Ft.)

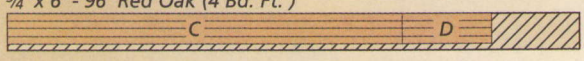

3/4" x 6" - 96 Red Oak (Two boards @ 4 Bd. Ft. each)

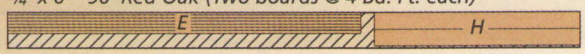

ALSO NEEDED: One - 48" x 96" sheet 3/4" Red Oak plywood

3/4" x 6" - 96 Red Oak (4 Bd. Ft.)

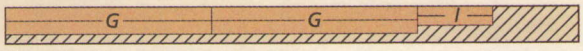

3/4" x 6" - 96 Red Oak (4 Bd. Ft.)

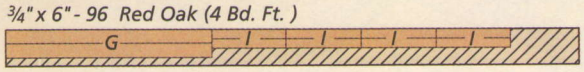

NOTE: *Parts C,D and E are planed to 1/2" thick.*

SHOP NOTEBOOK

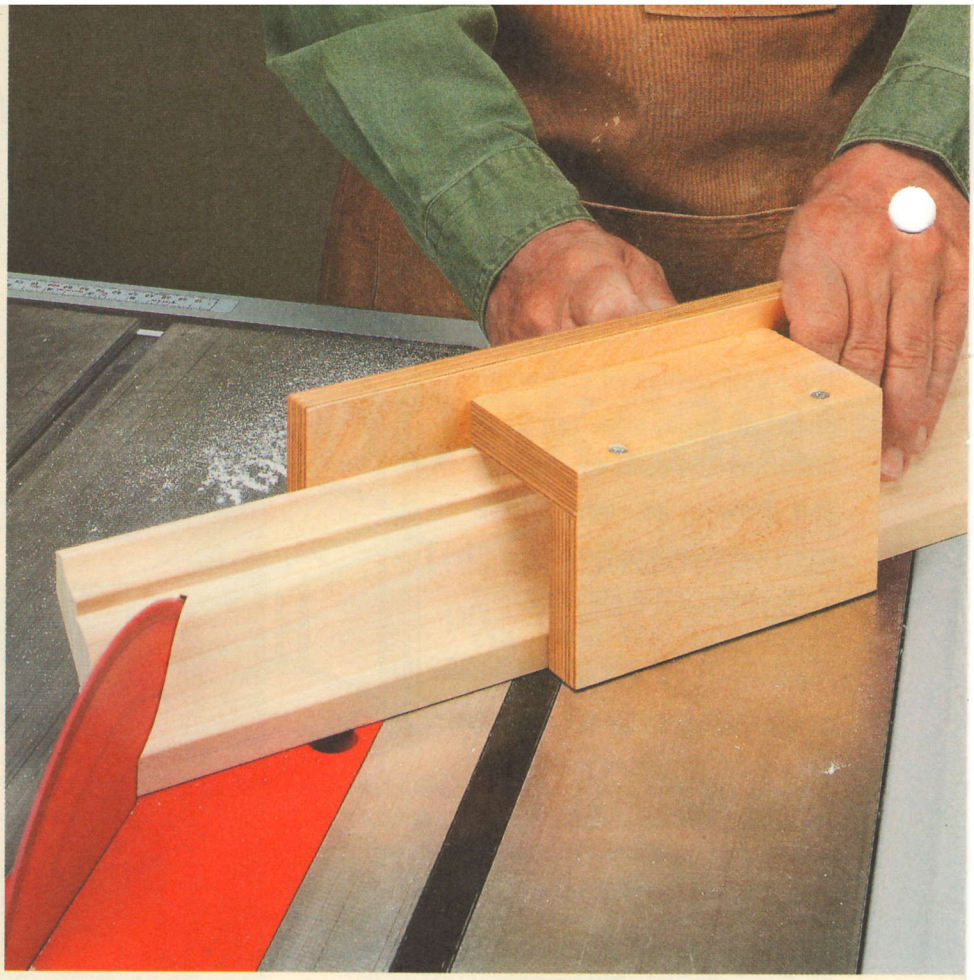

Crown Molding Jig

Mitering the crown molding for the corner cabinet on page 32 on the table saw presents a bit of a challenge. To miter the pieces with the molding lying flat on the saw, you have to tilt the saw blade and angle the miter gauge (a compound miter). The trouble with this method is that it doubles the possibility for error.

So in order to avoid this, I made a simple jig that holds the crown molding upright. This type of jig allows you to cut the miters without having to tilt the saw blade.

JIG DESIGN. As you can see in the photo above and the exploded view drawing below, the jig is just a plywood auxiliary fence that attaches to the front of the miter gauge. To hold the molding in position, a two-piece, L-shape bracket is screwed to the front of the fence. (I sized these pieces to hold the crown molding in an upright position.)

To cut both ends of the molding, you'll need to move the miter gauge from one miter slot to the other, and also angle the miter gauge head in the opposite direction. (You can see this in the right drawing below.)

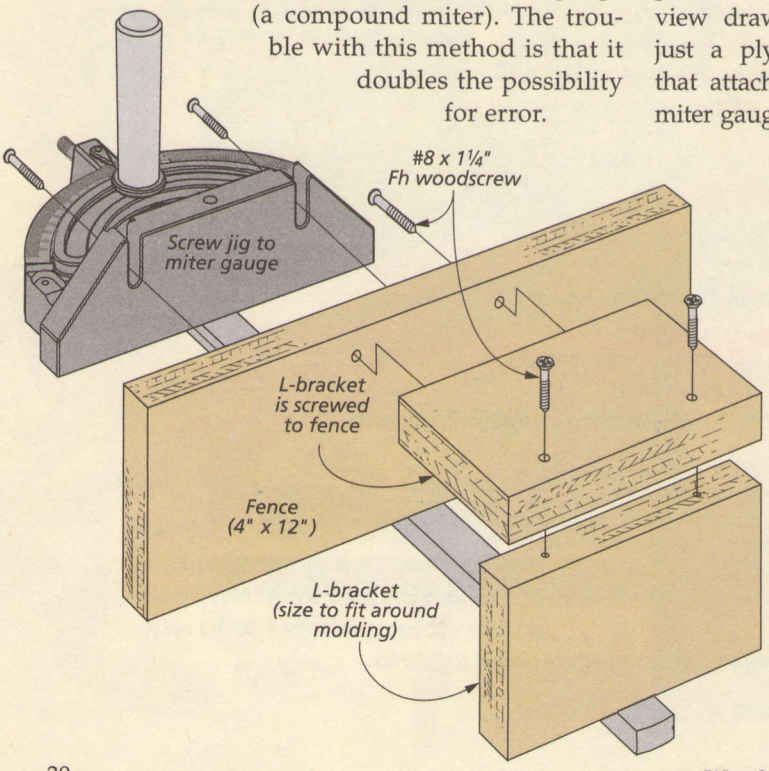

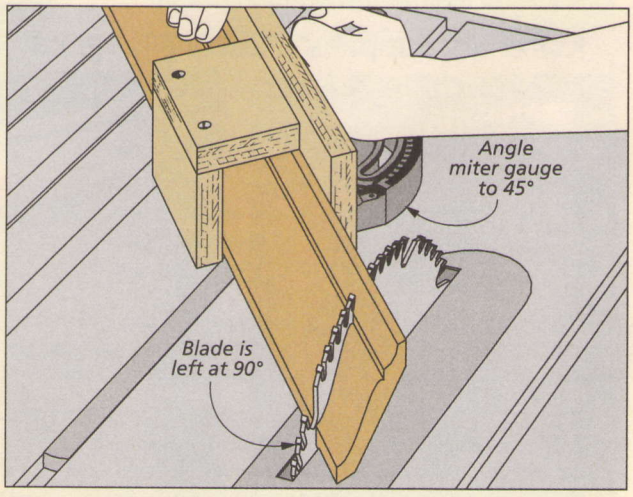

Opposite End. *After mitering one end of the molding, move the miter gauge to the opposite miter slot. Then angle the head in the opposite direction to miter the other end.*

Routing Stopped Slots

The keepsake box on page 18 is joined with splined miters. To rout the stopped slots for the splines, I used a 1/8"-dia. straight bit in the router table. The trick here is holding the mitered workpieces at 45° and knowing where to start and stop the slots. To do this, I used the simple router table setup shown below.

AUXILIARY TOP. Start by locking the fence in place, 7/16" away from the bit. To create a zero-clearance opening, I attached a 1/4" hardboard auxiliary top to my router table with double-sided tape. Then, I raised the spinning bit up through the hardboard.

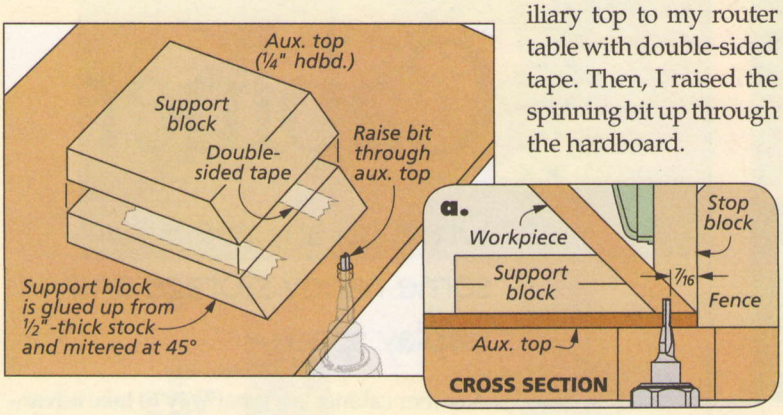

SUPPORT BLOCK. To support the workpieces at the correct angle while routing the slots, I mitered the end of a glued-up block at 45° and taped it to the auxiliary top. (You can use one of the sides of the box to position the block.)

STOP BLOCKS. The length of each slot is controlled by a couple of stop blocks clamped to the fence. In order to rout the slots, you'll need to slowly lower the workpiece straight down onto the spinning bit. Then, slide the workpiece from side to side, until it contacts the stop blocks. Note: You'll have to reposition the stop blocks for the slots on the opposite ends of the workpieces.

▲ A low-angle block plane is ideal for trimming end grain.

Shooting Board

To fine-tune the fit of the blocks in the lid of the keepsake box, you may need to shave small amounts of material from the edges and ends of the blocks.

I found that the best way to do this is to use a sharp block plane and a shooting board like the one shown here. A fence on the shooting board backs up the block and holds it at the proper angle while you plane the edge.

The base of the shooting board is glued up out of two layers of 1/2" MDF. The top layer is narrower than the bottom layer to create a rabbet for your block plane to ride along.

STOPS. To hold the various shapes of blocks, I made two removable, hardwood stops for the shooting board — a 90° stop and a stop with both 30° and 60° ends.

Each stop is secured to the shooting board with a pair of dowel pins. The key here is to make sure the dowel pins in the stops line up with the holes in the base. To do this, you'll use the stops as guides to drill the holes in the base of the shooting board.

Start by drilling a pair of 1/4"-dia. holes in each stop. (The exact location isn't important — just locate a hole near each end.) Next, clamp a stop to the base so that the end is flush with the edge of the rabbet. Then, use the holes in the stop as a guide to drill the holes in the base. You'll need to drill two pairs of holes in the base for the 30°/60° stop, as shown in Figure 1.

DOWEL PINS. Finally, to complete the shooting board, glue a couple of 1/4"-dia. dowel pins into the holes in each stop (detail 'a'). W

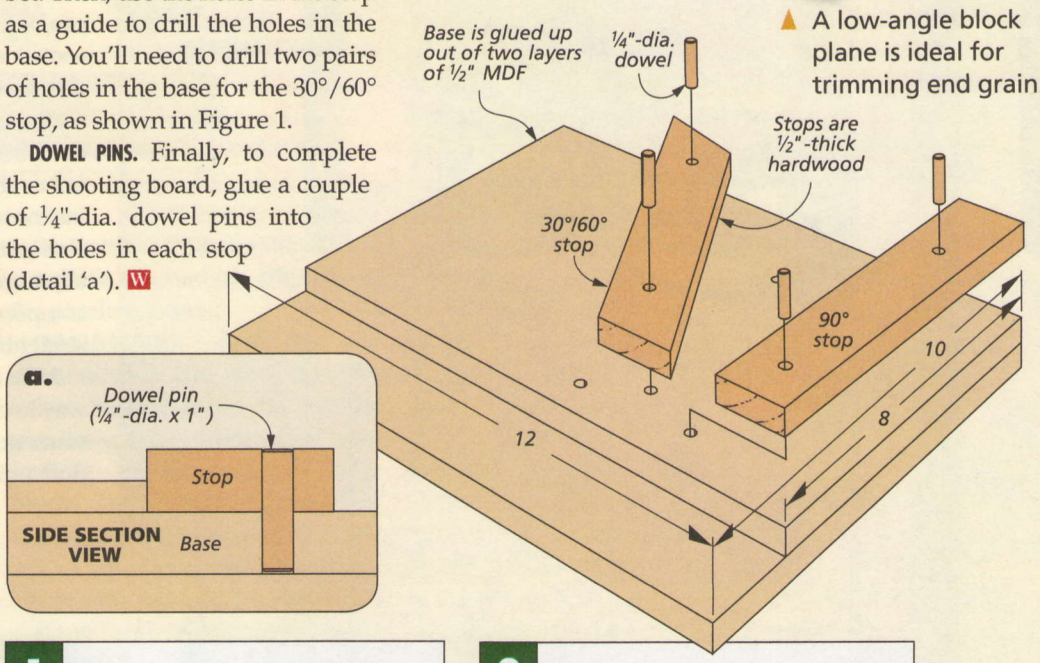

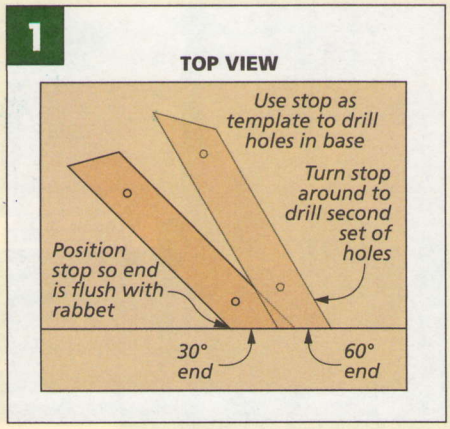

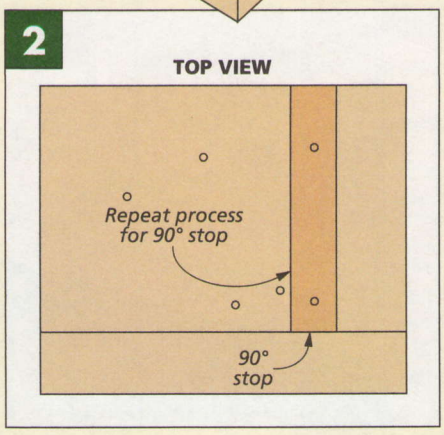

classic Corner Cabinet

Dress up any room with some handy storage and display space.

A corner cabinet is a great way to take advantage of a space that's often wasted in a room. But building one can seem a little bit like taking a geometry test. Getting all the angles right and still presenting an attractive face to the room can be a challenge. On top of that, you're presented with the choice of whether to build a full-sized, tall cabinet or a shorter base unit.

The cabinet shown here offers an eye-catching design with options for either a tall or short version. Best of all, it's built from inexpensive plywood and poplar — both great choices for painted furniture. And while I used a few unique joinery techniques for the various components of the cabinet, they're all pretty straightforward and easy to employ.

All in all, building this corner cabinet is a nice way to change the look of a room and open up some storage and display space. I think you'll find it gives your shop skills a workout, too.

Woodsmith GO ONLINE EXTRAS

For details on how to modify the base cabinet into a stand-alone unit, visit our website at Woodsmith.com.

CONSTRUCTION DETAILS

OVERALL DIMENSIONS: 39¼"W x 16¾"D x 77"H

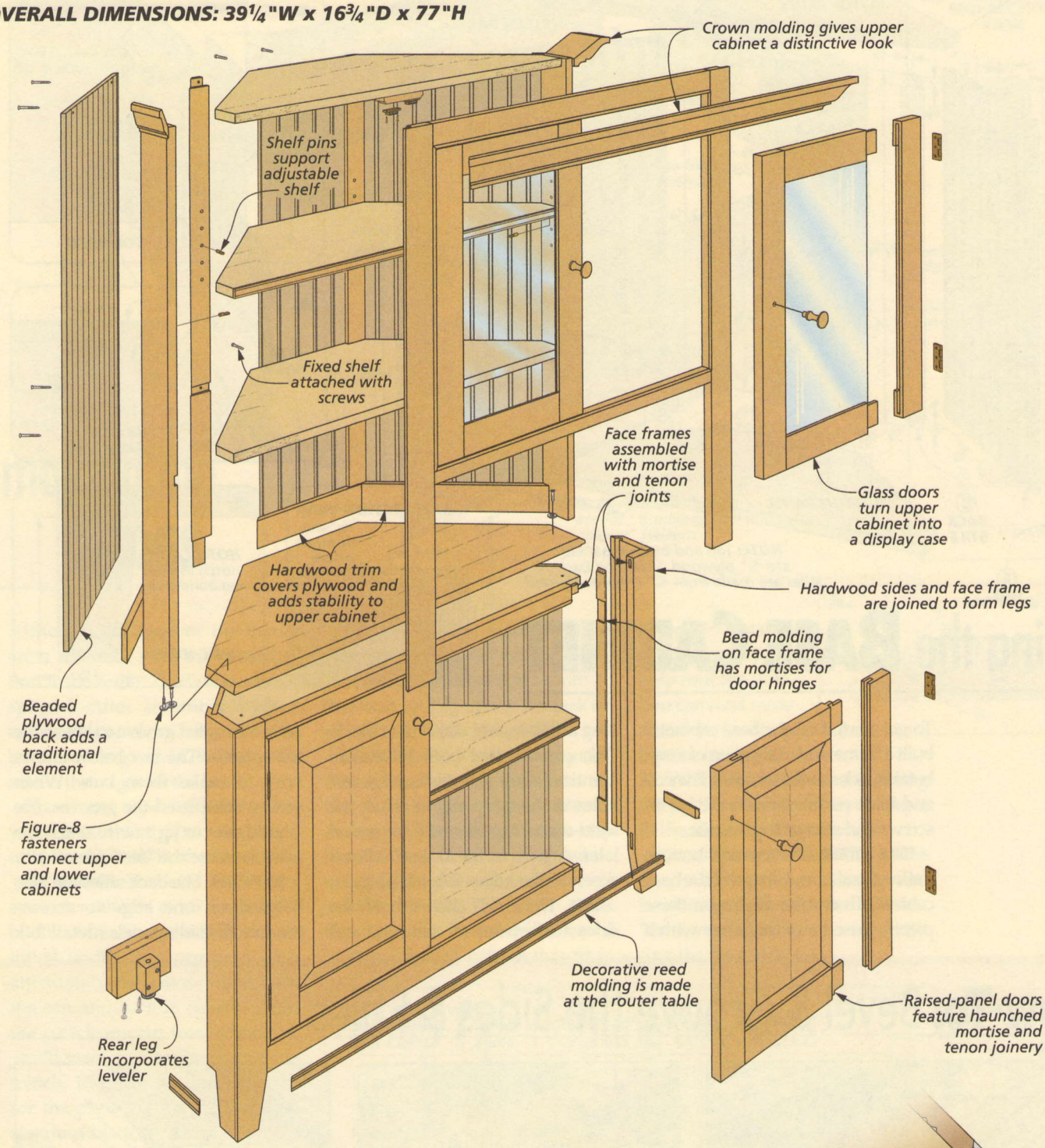

TOP SECTION VIEW

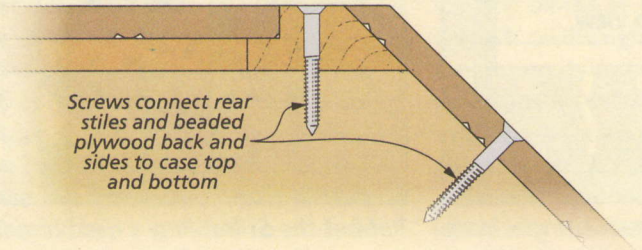

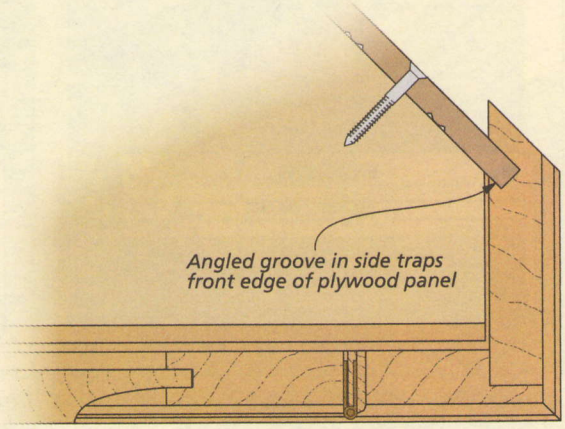

TOP SECTION VIEW

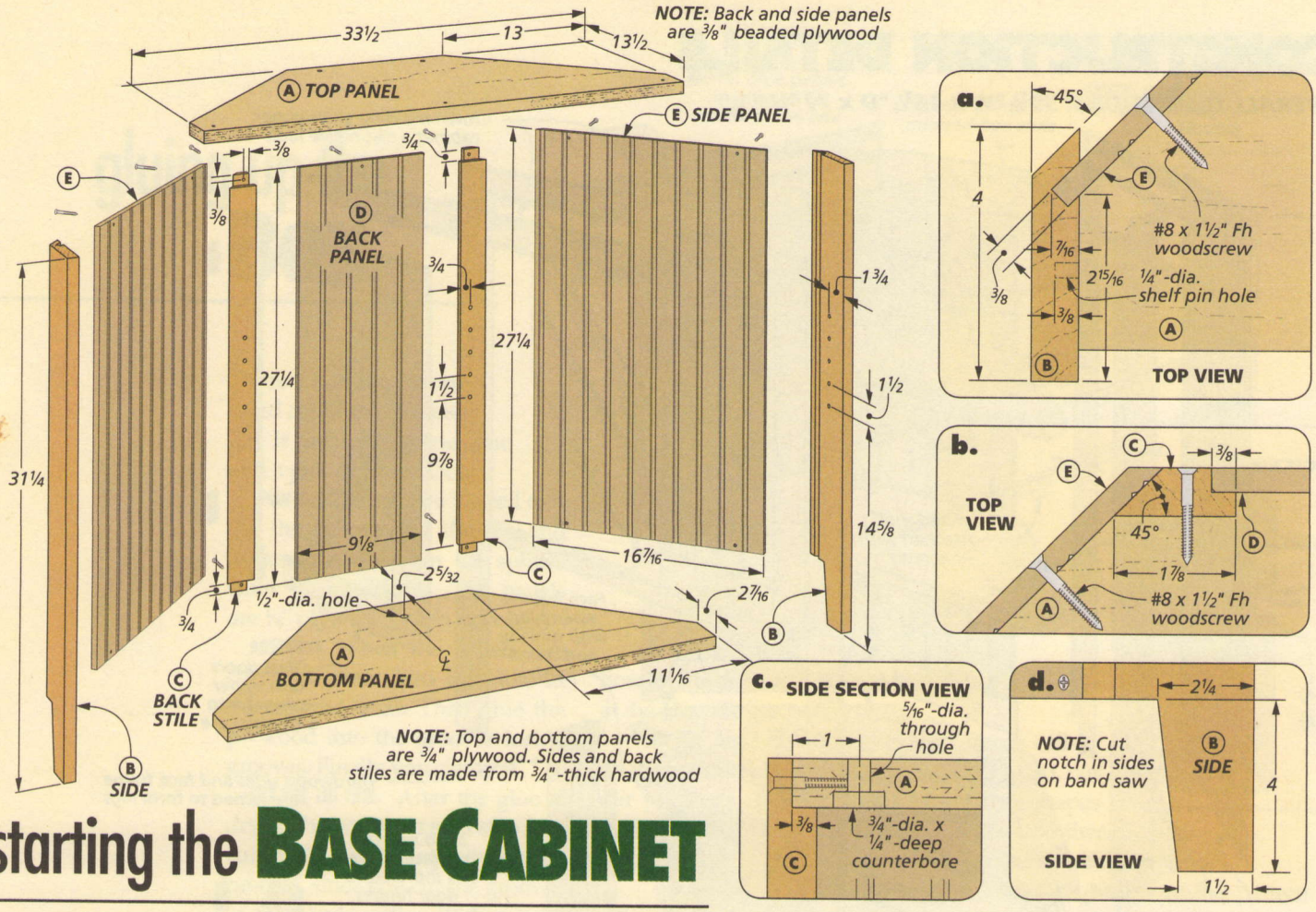

starting the BASE CABINET

To get started on the base cabinet, I built a framework consisting of a top, bottom, sides, and back stiles. The side and back panels are attached with screws and strengthen the case.

TOP & BOTTOM. The top and bottom define the size and shape of the base cabinet. To cut the angles on these pieces, I used a miter gauge with a long auxiliary fence and stop block. This ensures that both pieces are identical. Drill counterbored screw holes in the top panel to attach the solid-wood top that will be added later. A hole in the bottom allows access to the adjustable back leg.

SIDES. Detail 'a' shows how the sides are beveled on one edge and have an angled groove to house the side panels. The box below shows how to make these cuts. When you've completed the grooves, use a band saw or jig saw to notch the sides to create the "feet" (detail 'd').

BACK STILES. The back stiles are also beveled on one edge to accommodate the side panels (detail 'b').

How-To: Bevel & Groove the Sides & Stiles

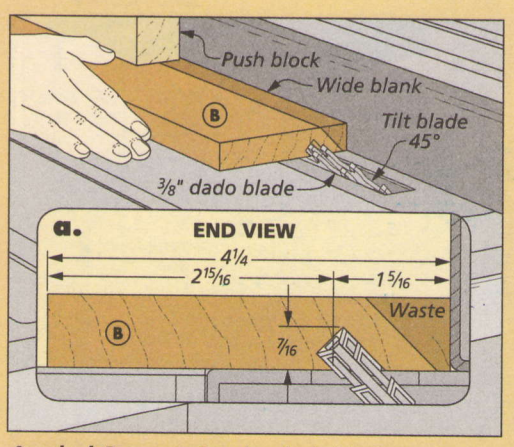

Angled Groove. *Set the dado blade to the correct width and tilt it to 45° to cut the groove. Use a test piece to sneak up on the depth.*

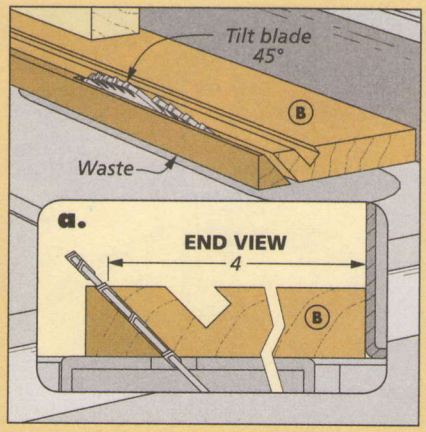

Beveled Edge. *Install a single blade and rip the rear edge of the side parallel to the angled groove.*

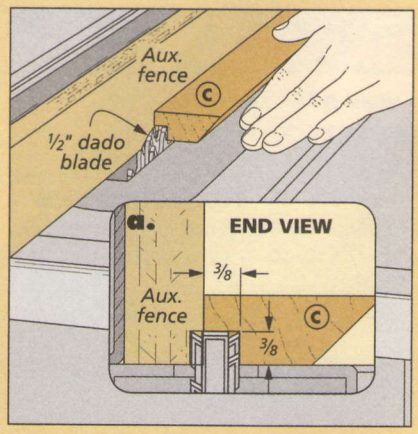

Rabbet the Stiles. *Bury a dado blade in an auxiliary fence to cut the rabbets on the edge of the back stiles.*

They also have a rabbet on the opposite edge for the back panel. Complete the stiles by rabbeting the ends to fit around the top and bottom (detail 'c,' opposite page).

SHELF PIN HOLES. Now is a good time to drill the shelf pin holes in the sides and the back stiles. For this, I started by laying out the locations as shown in the main drawing and then used a drill press.

INITIAL ASSEMBLY. At this point, it's time to glue and screw the sides and back stiles to the top and bottom. Align the bevel on the stile with the edge of the top and bottom while keeping everything square as you go.

BACK & SIDE PANELS. The beaded plywood adds a distinctive look to the cabinet. The back panel is simply cut to fit the opening. But the side panels are cut square on the front edge and beveled to final width on the rear edge. Finally, you can install the panels with glue and screws.

FACE FRAME. To cover the plywood edges and provide a solid frame for the doors, I assembled a face frame using mortise and tenon joinery. I also added a thin bead molding on the inside of the frame for a decorative detail.

STILES. You can start by cutting the stiles to final size. As you can see in details 'a' and 'b,' the mortises in the stiles are different lengths. After cutting the mortises, cut the rabbet on the outside edge of both stiles to fit over the sides, as shown in the box below. Then, cut the angled foot at the band saw to match the sides of the cabinet.

RAILS. The box below shows how to cut the tenons on the rails (note the different widths). Assemble the face frame and install it with glue.

MOLDING. To make the bead molding, start with an extra-wide, ¼"-thick blank and rout a bead on both edges. Then, rip the strips to final width. Fit the molding one piece at a time, mitering each to length.

Before gluing the molding in place, cut the hinge mortises in the vertical molding pieces. The far right drawing below shows how I cut the mortises in the thin molding.

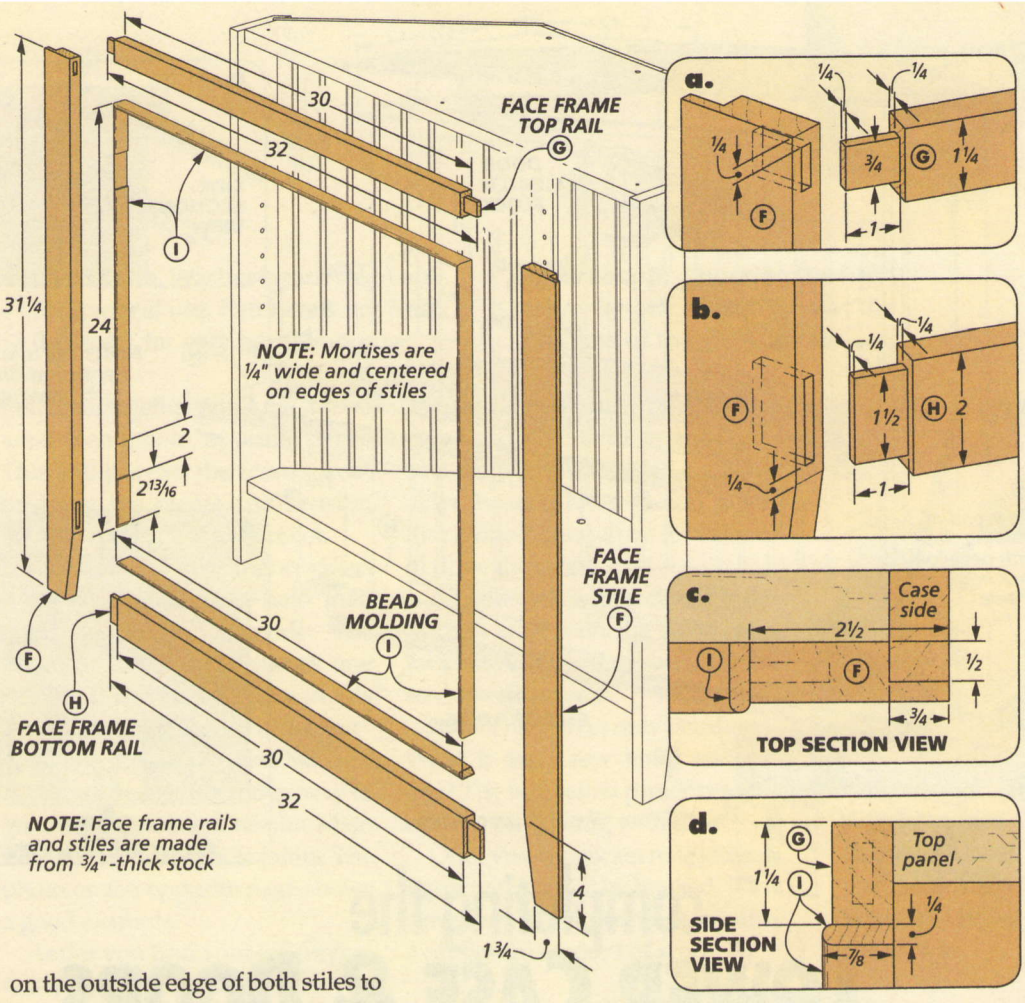

Rabbet, Tenon & Hinge Mortise

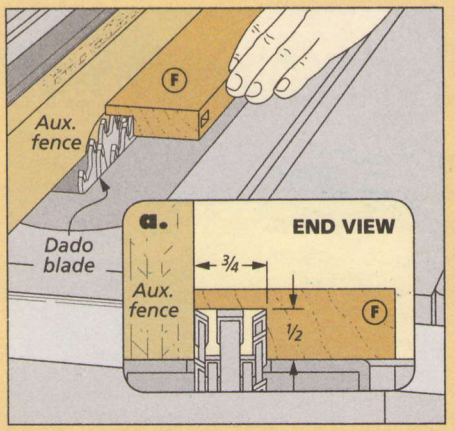

Face Frame Stile Rabbet. *Use the full width of the dado blade to cut the rabbet that fits over the sides of the case.*

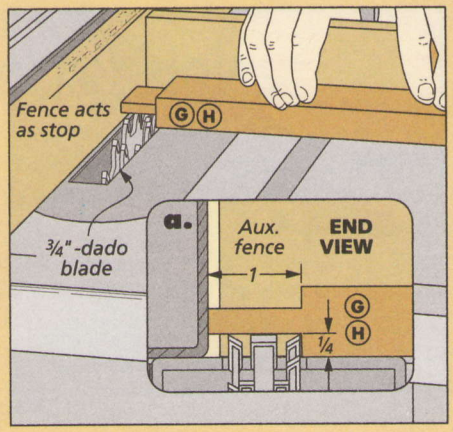

Face Frame Rail Tenons. *Use an auxiliary fence on the miter gauge to cut the tenons on the ends of the rails.*

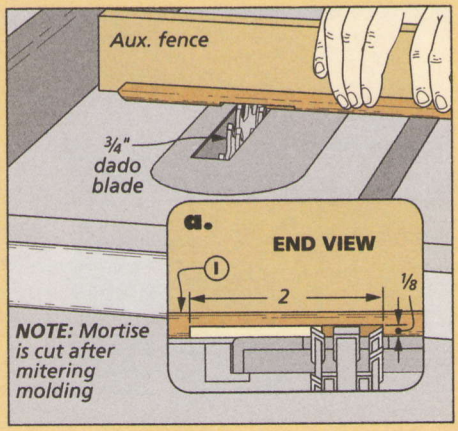

Hinge Mortise. *Raise the dado blade in very small increments to sneak up on the perfect depth for the mortise.*

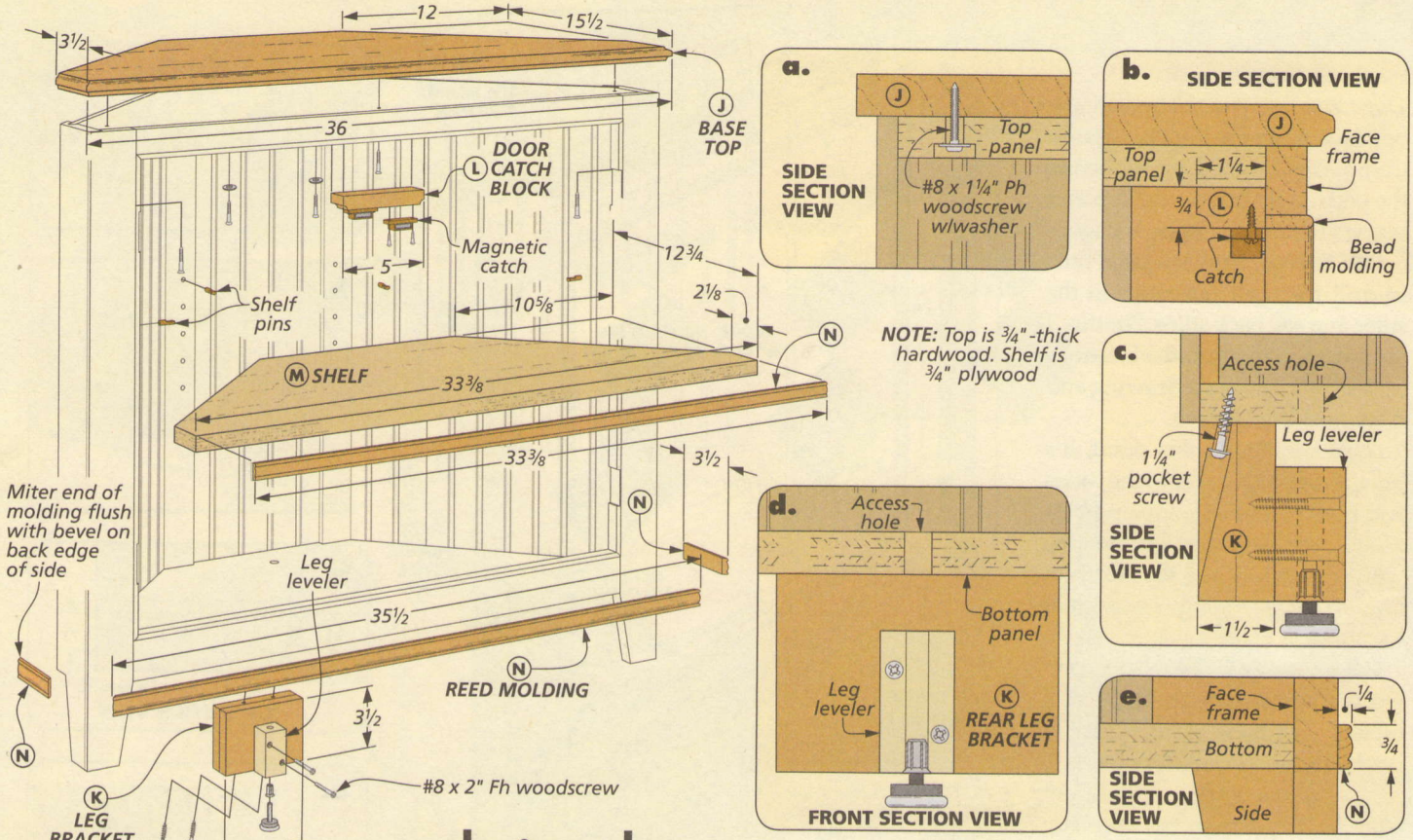

completing the LOWER CASE & DOORS

The base cabinet is starting to take shape, but there's still a fair amount of work to be done. An adjustable shelf, a hardwood top, and a pair of raised panel doors will all serve to make the cabinet more attractive and functional. There are also the reed moldings and door catches to install. But the first order of business is to add a rear leg and leveler so the cabinet can stand upright.

REAR LEG BRACKET. To address the reality that many walls aren't perfectly plumb or square, I added an adjustable rear leg. I decided to use a simple leveler (see page 51 for sources) attached to a bracket foot. All you need to do is glue up two pieces of hardwood for the bracket. Then, drill pocket holes in the back side (detail 'c'). When you're ready to attach the leveler to the bracket, align the adjusting screw with the access hole in the bottom. Make sure to keep the hole aligned as you fasten the bracket to the base with pocket screws.

How-To: Rout the Edge Profiles & Reed Molding

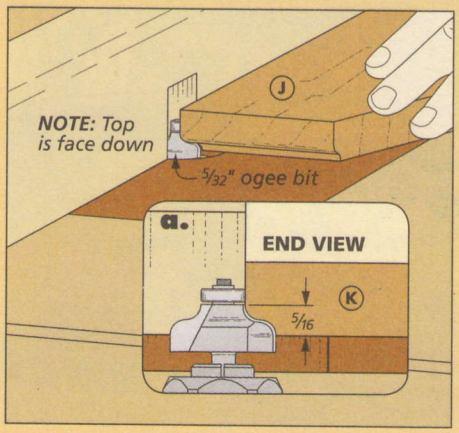

Ogee. *For the upper section of the profile, use an ogee bit. To avoid tearout, rout the ends first, then the long-grain front edge.*

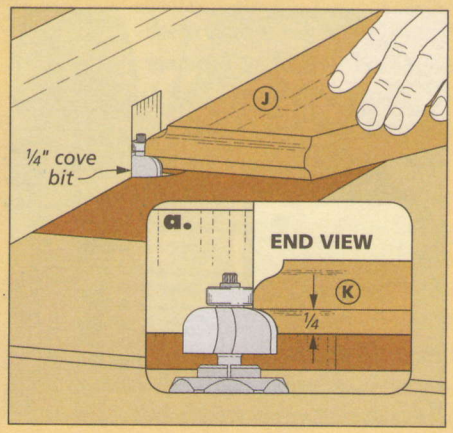

Cove. *Flip the top over and complete the bottom part of the profile with a cove bit. Once again, start with the end grain.*

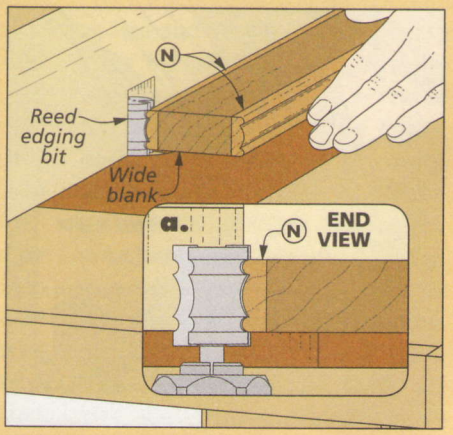

Reed Molding. *Start with a wide blank and rout the reed profile on both edges. Then, rip the strips free at the table saw.*

DOOR CATCH BLOCK. Now is an opportune time to add a block for mounting the door catches. The block is just a small piece of hardwood, but I routed a cove profile on the ends and back to dress it up a bit. Then you can glue it in place, centered in the opening of the cabinet.

ADD THE TOP. A hardwood top, with an interesting edge profile adds character to the cabinet. After cutting the top to width, use the same miter gauge technique as before to cut the angled sides. (While you're set up for this cut, you might as well cut the adjustable shelf, too. Make sure to note the different measurements for the shelf, however, before making the cuts.)

The box at the bottom of the opposite page shows how I used two common router bits to create the complex profile for the edges. When you've routed the top, you can attach it with screws and washers (detail 'a,' opposite page).

REED MOLDING. Reed molding on the shelf and around the base of the cabinet complements the edge profile of the top. The bottom right drawing on the opposite page shows how to safely rout the profile on a wider blank, then rip the strips free.

DOORS. Raised panel doors complete the base cabinet. One detail here is the use of a haunched tenon. The haunch fills in the groove in the stiles that holds the panel. You can start by cutting the rails and stiles to final size. Then cut the groove on the inside edge of each piece. Detail 'c' gives you the location for the mortises in the stiles. The box below shows an easy way to cut the grooves and haunched tenons on the rails.

RAISED PANELS. I glued up narrower stock for the raised panels. After cutting them to final size, rout the edge profile using a panel-raising bit in the router table. Now you can assemble the doors with glue in the mortises, leaving the panel to float. Add the hinges, knobs, and strike plates to complete the base cabinet.

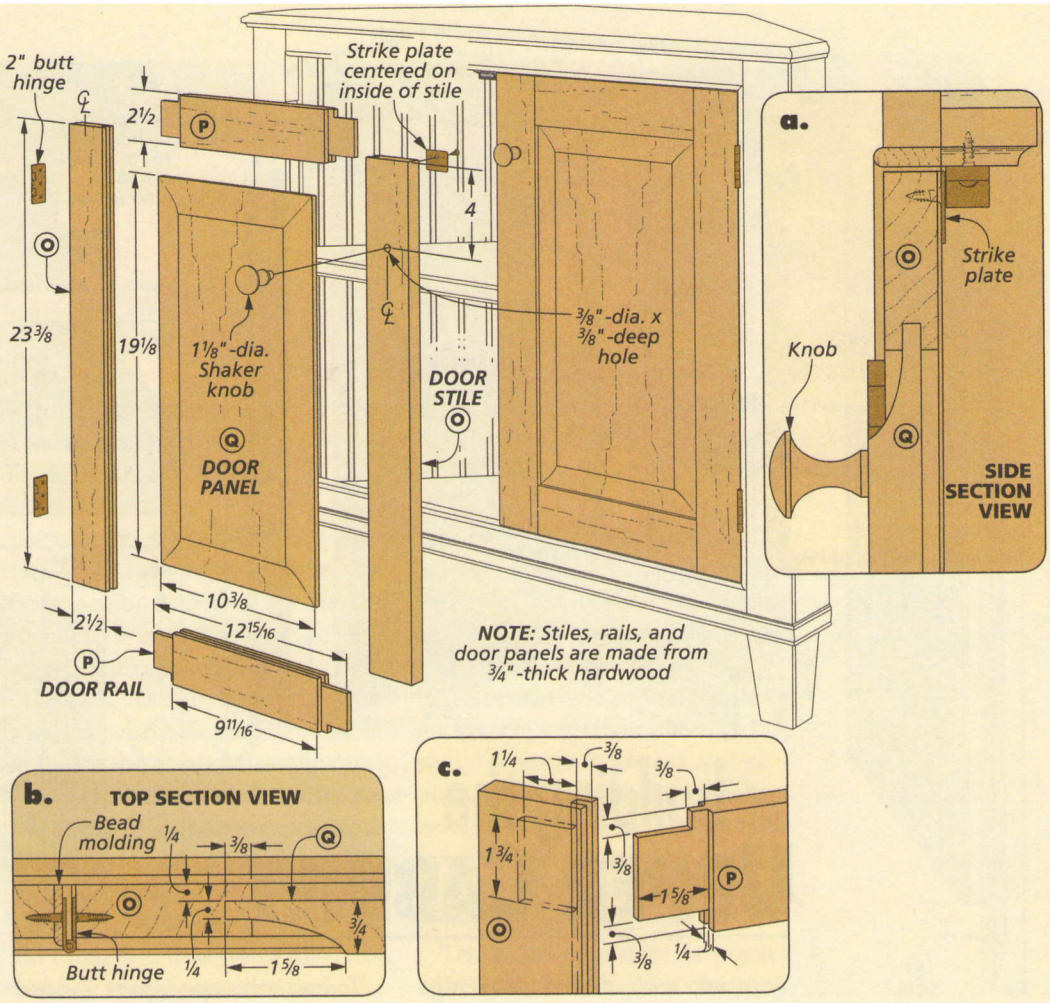

Door Frame with Haunched Tenons

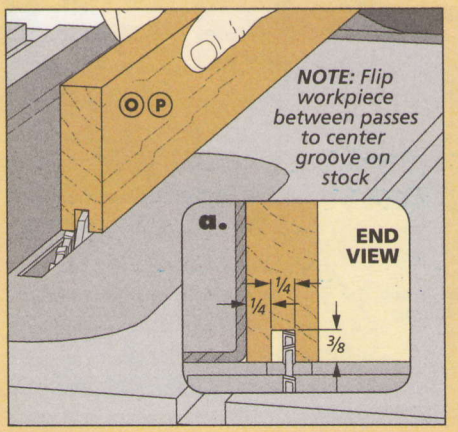

Groove. *To keep the groove centered, use a standard blade aligned just off center and flip the workpiece end-for-end.*

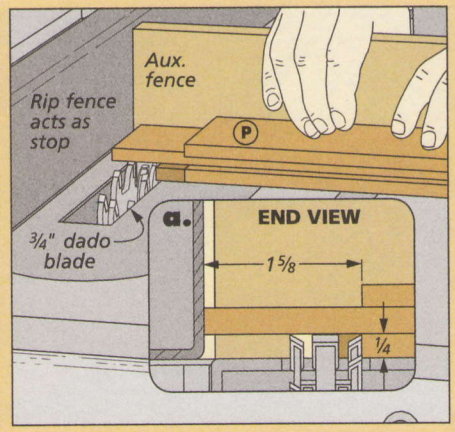

Cut the Tenons. *Use a dado blade and an auxiliary fence on the miter gauge when cutting the tenons on the rails.*

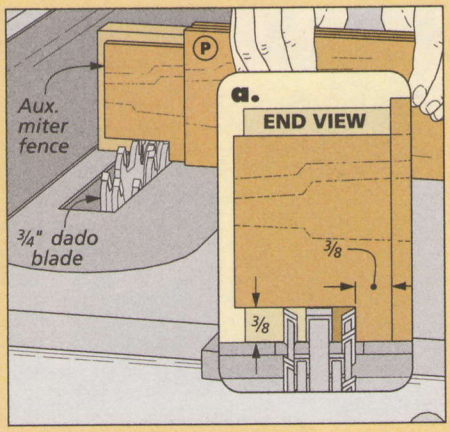

Haunch Cuts. *To form the haunch, simply stop the shoulder cut short of the main body of the rail.*

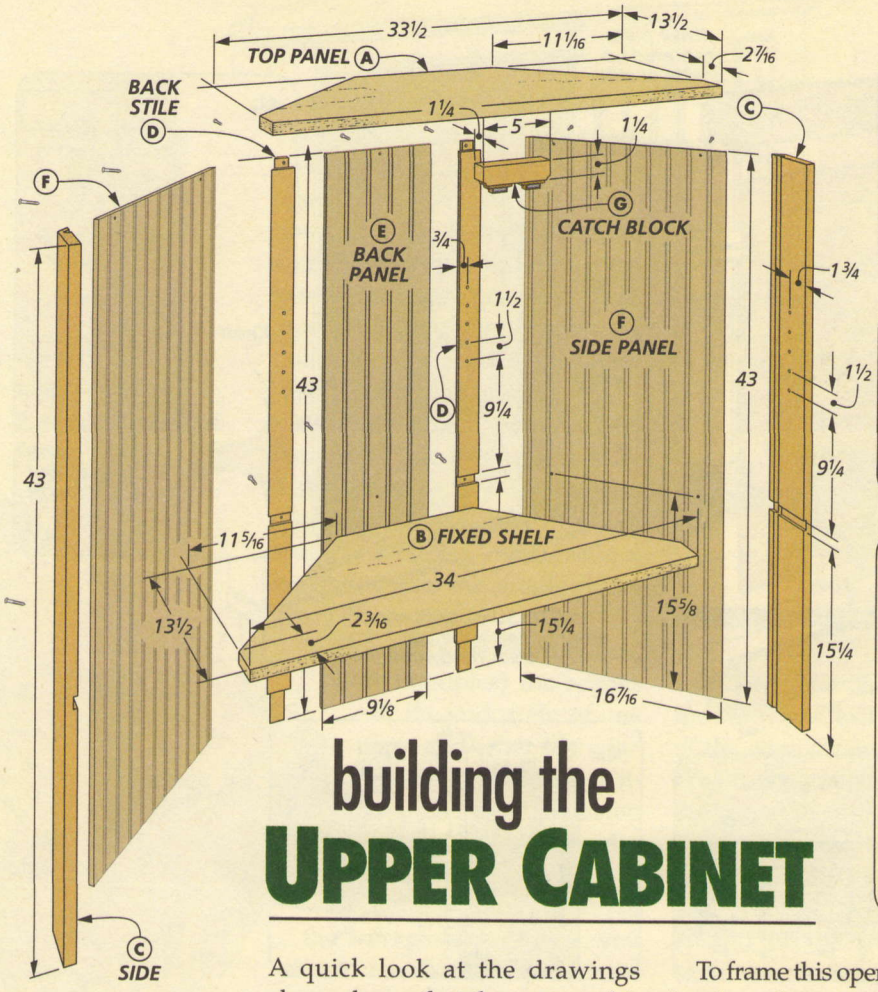

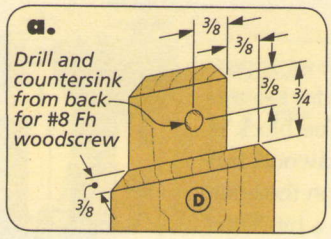

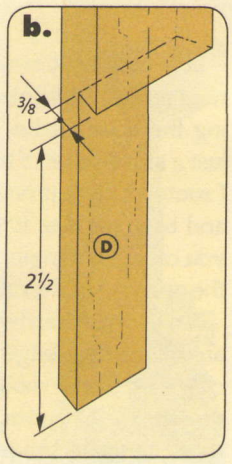

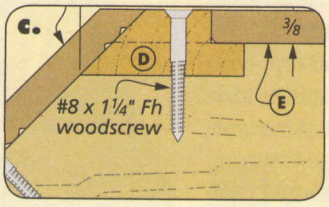

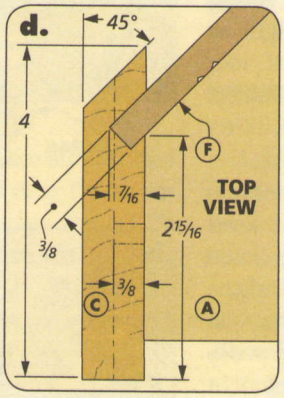

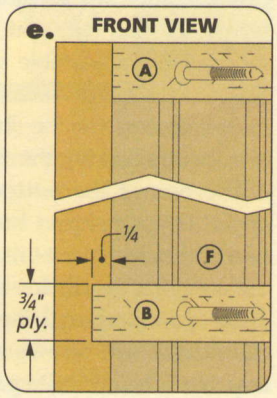

building the UPPER CABINET

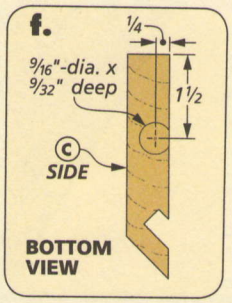

A quick look at the drawings above shows that the upper cabinet employs the same basic design and joinery techniques as the base cabinet. But there are a few differences. Most notably, there's no bottom on the upper cabinet. Instead, the case is stabilized by a fixed shelf that fits into dadoes in the sides and back stiles. This creates an open area where the two cabinets are joined together.

To frame this open space, I added hardwood trim to the bottom edges of the side and back panels. This gives the piece a more finished look and adds stability to the lower edge where the two cabinets are attached. I also added crown molding to the case top. The profile of the molding goes well with the ogee and cove profile on the top of the base cabinet. The two combine for a distinctive look.

TOP & SHELVES. As before, I began by cutting the top and fixed shelf to final size. I also cut the adjustable shelf, since the table saw was already set up for the angled cuts. You can just set the adjustable shelf aside until later.

SIDES & STILES. Now you can turn your attention to the sides and stiles. After cutting the pieces to length and making the joinery cuts as you did for the base pieces, you

How-To: Complete the Back Stiles

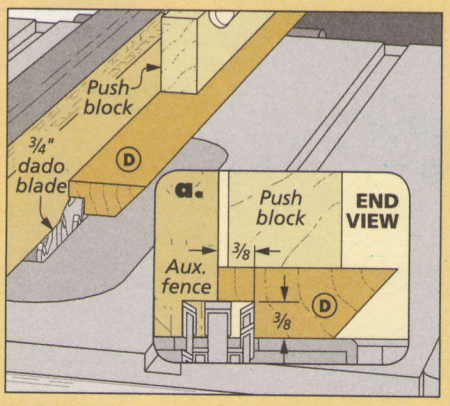

Rabbet. *With an auxiliary rip fence installed, bury part of the dado blade to cut the rabbets for the back panels.*

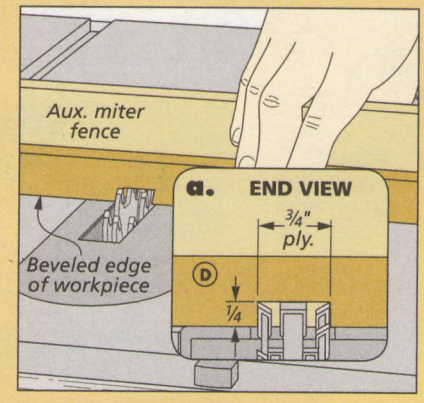

Dado for Fixed Shelf. *Install an auxiliary fence on the miter gauge to cut the shallow dado for the fixed shelf.*

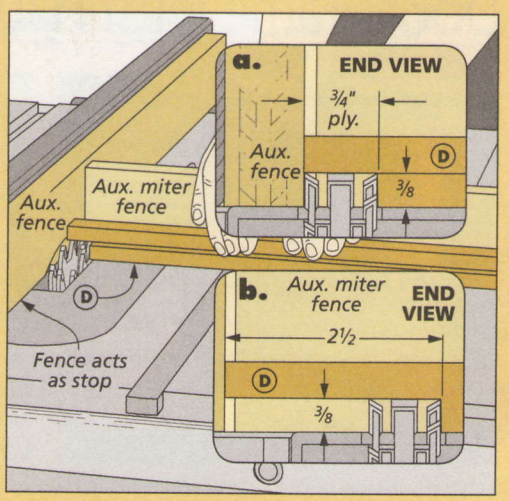

Rabbet the Ends. *Use the rip fence as a stop to limit the length of the cut when rabbeting the ends of the stiles.*

need to cut dadoes in each piece to house the fixed shelf (detail 'e,' opposite page). The lower ends of the stiles are also rabbeted to accommodate the trim (detail 'b,' opposite page). The box at the bottom of the opposite page shows how to cut the dadoes and rabbets at the table saw.

Detail 'f' on the opposite page shows where to drill a shallow counterbore on the ends of the sides. These recesses hold the two figure-8 fasteners I used to attach the upper cabinet to the base. Finally, complete these pieces by drilling the shelf pin holes.

BACK & SIDE PANELS. The next step is to add the back and side panels. The beaded plywood is visible in the upper unit, so you'll need to make sure the beads are evenly spaced. After installing the panels, you can assemble the case and add the door catch block.

FACE FRAME. The upper cabinet has a mortise and tenon face frame with bead molding along the edge. After completing the face frame, attach it to the case and fixed shelf. Then after mitering the bead molding to length, cut the hinge mortises and install the molding.

BASE TRIM & ADJUSTABLE SHELF. Installing trim on the lower edge of the base is pretty straightforward. It's just cut to width and mitered to fit as shown in details 'c' and 'f,' above. Dry fit the pieces and glue them in place when you have a good fit. Now you can rout and cut another strip of reed molding and use it to edge the adjustable shelf.

CROWN MOLDING. I used a purchased crown molding (see page 51 for sources). Shop Notebook on page 30 shows the details for making the jig I used to cut the molding at the table saw (box below).

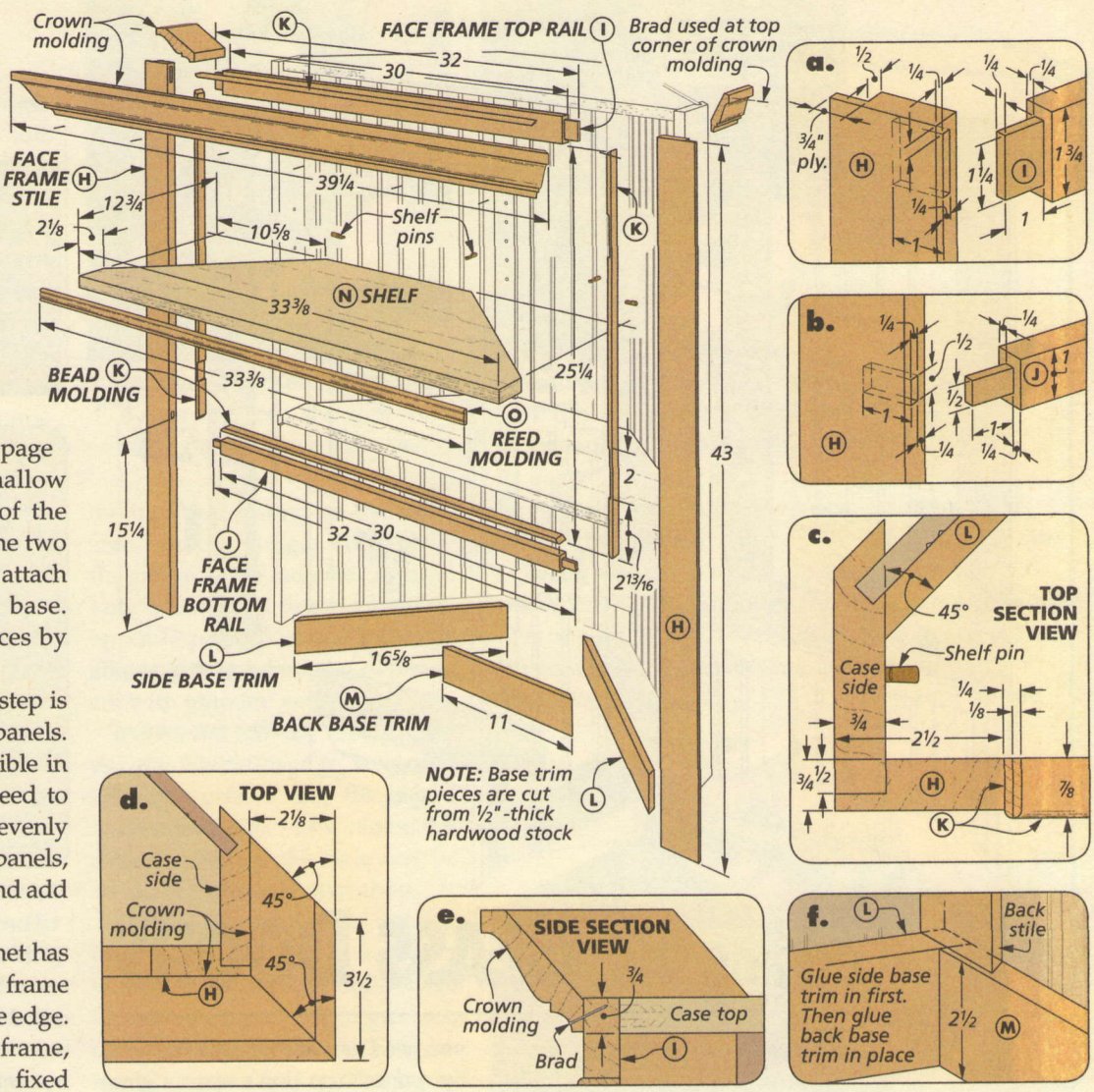

Crown Molding

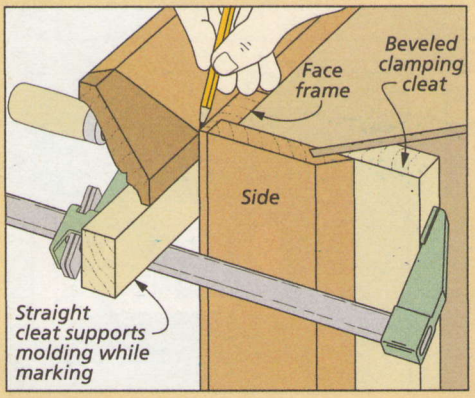

Marking the Front. *Clamp a cleat on the front edge to support the crown molding while you mark the exact length.*

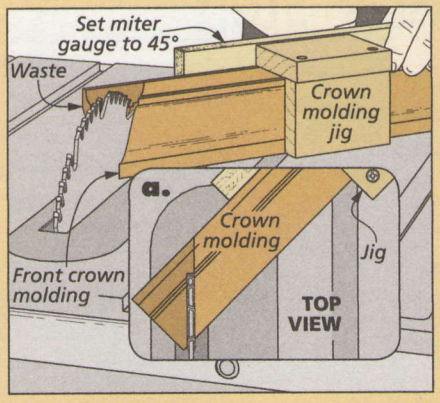

Crown Molding Jig. *Use the jig shown on page 30 to cut both ends of front crown molding to layout lines.*

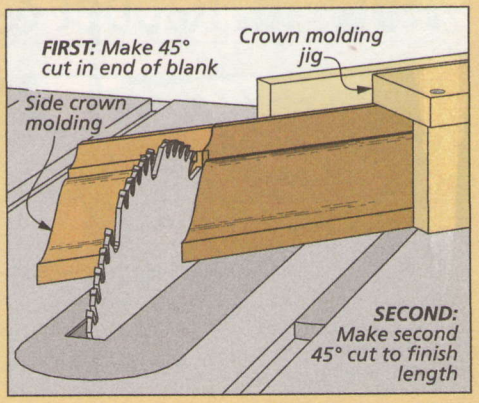

Cut the Sides. *After installing the front molding, mark the side pieces and use the jig to miter them to final length.*

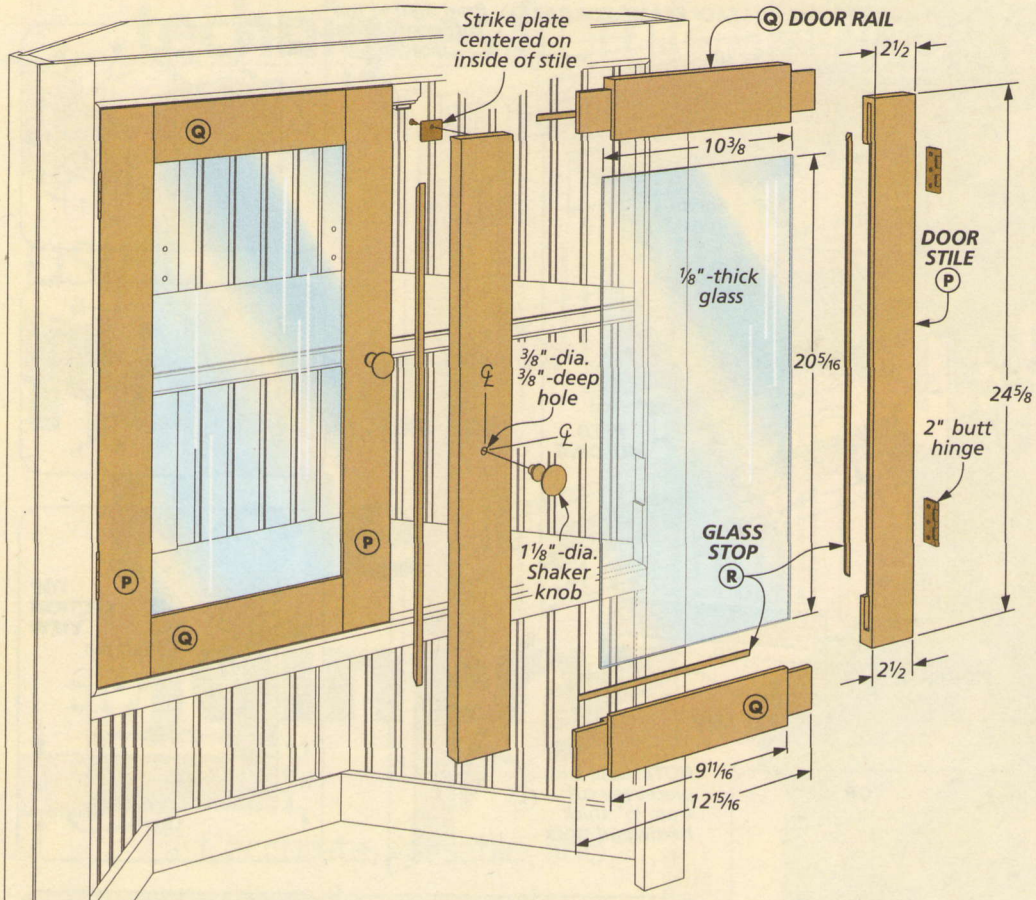

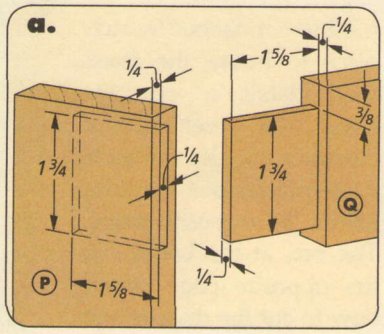

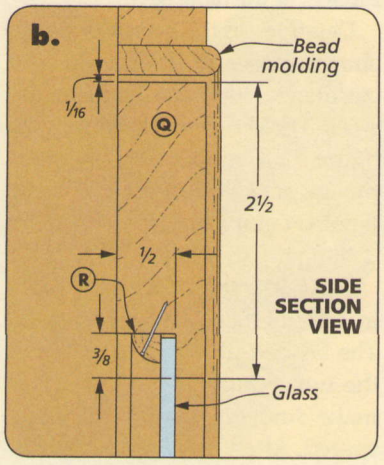

adding the GLASS DOORS

With the case of the upper cabinet complete, you're ready to add the doors and attach the cabinet to the base. I chose to use glass instead of raised panels for the upper doors. This turns the space in the cabinet into an attractive display area.

DOOR FRAMES. The decision to use glass doors involved a change in design as well. Since you might need to replace the glass someday, you need to make it easy to remove the panes. You don't want a glass pane sandwiched in a groove like you would a hardwood panel.

Instead, I assembled the doors and then routed a rabbet on the inside edge to form a recess. Then, you can use shop-made glass stop to secure the glass in the frame. Simply miter the stop to length. (You'll attach it after finishing the cabinet).

The main drawing and detail 'a' illustrate how the doors are assembled. The thing to note here is that these doors employ standard mortise and tenon joinery. There's no need for a haunched tenon since there's no groove in the rails and stiles. The left drawing below shows how to rout the rabbet on the inside of the frames.

PUTTING IT ALL TOGETHER. By simply setting the upper cabinet on the base, you can see how it's a pretty stable fit. But I've added a couple of connections to make it rock solid.

How-To: Rabbet & Glass Stop

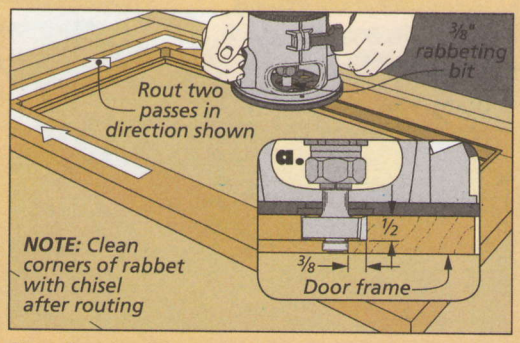

Routing Rabbet for Glass. *Rout clockwise around the interior of the cabinet door to form the rabbet for the glass panel.*

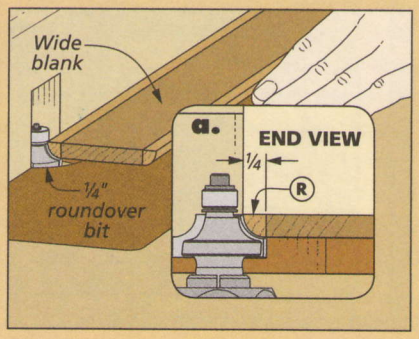

Shaping the Glass Stop. *Starting with a wide blank makes it easy and safer to round over both edges.*

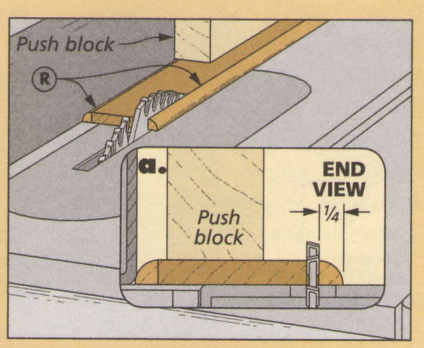

Rip the Stop to Width. *At the table saw, set up the cut so the stop falls on the outside of the blade.*

First, I made a cleat to connect the two cabinets at the back. Use a dado blade in the table saw to cut a groove to fit over the top of the base cabinet. Then you can drive screws through the cleat into both the upper and lower cabinets for a sturdy connection. Detail 'a' shows how the screws anchor in solid wood. I also installed "figure-8" fasteners in the recesses of the sides.

A good paint job completes the corner cabinet. (The details for the paint I used can be found in Sources on page 51.) Then, you can install the glass panels by mitering the glass stop to fit. Now just find the right corner for the cabinet. W

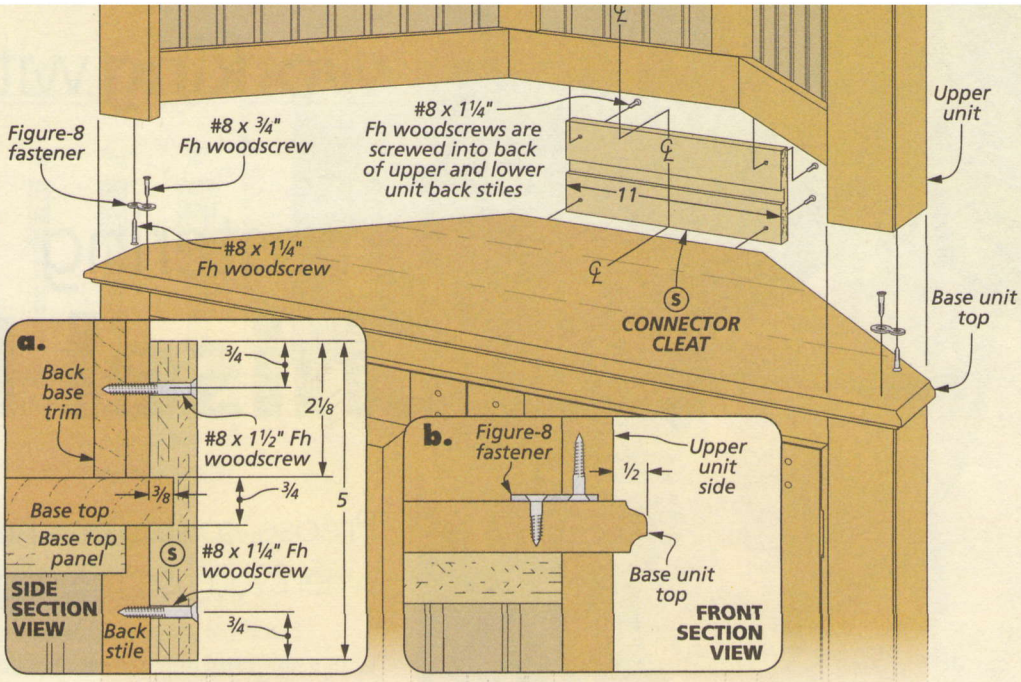

Base Cabinet - Materials, Supplies & Cutting Diagram

A	Top/Bottom Panel (2)	¾ ply. - 13½ x 33½	E	Side Panels (2)	⅜ ply. - 13½ x 27¼
B	Sides (2)	¾ x 4 - 31¼	F	Face Frame Stiles (2)	¾ x 2½ - 31¼
C	Back Stiles (2)	¾ x 1⅞ - 27¼	G	Face Frame Top Rail (1)	¾ x 1¼ - 32
D	Back Panel (1)	⅜ ply. - 9⅛ x 27¼	H	Face Frame Bottom Rail (1)	¾ x 2 - 32

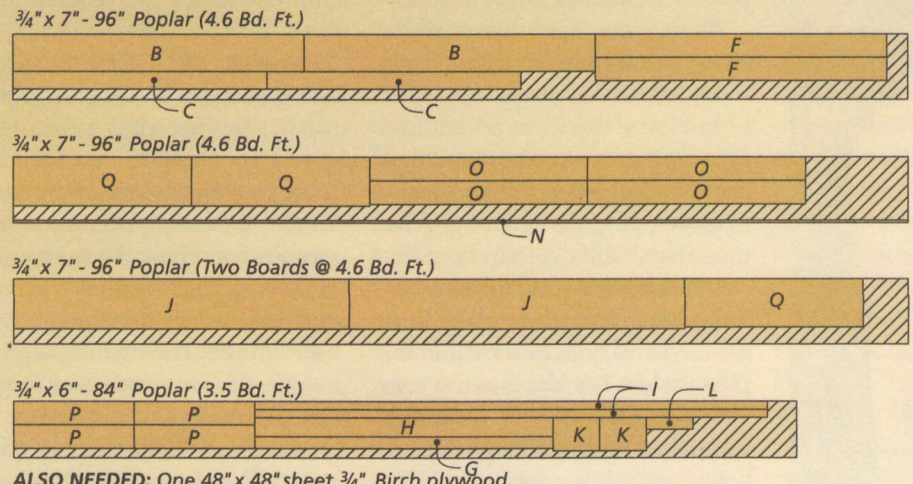

ALSO NEEDED: One 48" x 48" sheet ¾" Birch plywood
One 48" x 48" sheet ⅜" Beaded plywood

I	Bead Molding	¼ x ⅞ - 110 rgh.
J	Base Top (1)	¾ x 15½ - 36
K	Leg Bracket (1)	1½ x 3½ - 5
L	Door Catch Block (1)	¾ x 1¼ - 5
M	Shelf (1)	¾ ply. - 13 x 33⅜
N	Reed Molding (1)	¾ x ¼ - 96 rgh.
O	Door Stiles (4)	¾ x 2½ - 23⅜
P	Door Rails (4)	¾ x 2½ - 12 15/16
Q	Door Panels (2)	½ x 10⅜ - 19⅛

- (14) #8 x 1½" Fh Woodscrews
- (4) #8 x 1¼" Fh Woodscrews
- (2) #8 x 1¼" Ph Woodscrews
- (2) #8 x 2" Fh Woodscrews
- (2) ⅜" Washers
- (2 pr.) 2" Ant. Brass Butt Hinges w/Screws
- (2) 1⅛"-dia. Shaker Knobs
- (4) Antique Brass Shelf Pins
- (1) Leg Leveler
- (2) Magnetic Catches w/Screws
- (4) 1¼" Pocket Screws

Upper Cabinet - Materials, Supplies & Cutting Diagram

A	Top Panel (1)	¾ ply. - 13½ x 33½	F	Side Panels (2)	⅜ ply. - 16 7/16 x 43
B	Fixed Shelf (1)	¾ ply. - 13½ x 34	G	Catch Block (1)	1¼ x 1¼ - 5
C	Sides (2)	¾ x 4 - 43	H	Face Frame Stile (2)	¾ x 2½ - 43
D	Back Stiles (2)	¾ x 1⅞ - 43	I	Face Frame Top Rail (1)	¾ x 1¾ - 32
E	Back Panel (1)	⅜ ply. - 9⅛ x 43	J	Face Frame Bottom Rail (1)	¾ x 1 - 32

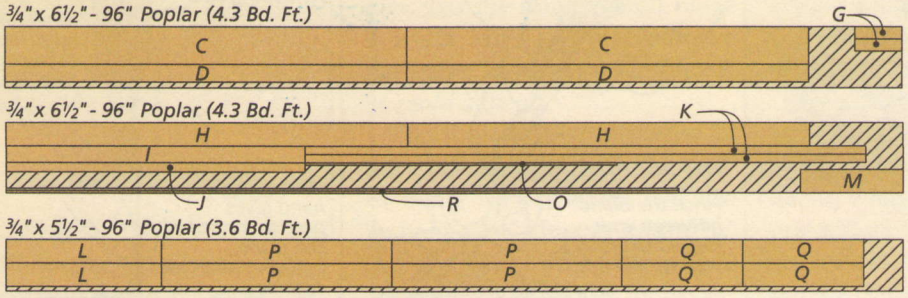

ALSO NEEDED: One 48" x 48" sheet ¾" Birch plywood
One 48" x 48" sheet ⅜" Beaded plywood

K	Bead Molding	¼ x ⅞ - 120 rgh.
L	Side Base Trim (2)	½ x 2½ - 16 21/32
M	Back Base Trim (1)	½ x 2½ - 11
N	Shelf (1)	¾ ply. - 12¾ x 33⅜
O	Reed Molding (1)	¾ x ¼ - 33⅜
P	Door Stiles (4)	¾ x 2½ - 24⅝
Q	Door Rails (4)	¾ x 2½ - 12 15/16
R	Glass Stop (2)	¼ x ¼ - 145 rgh.
S	Connector Cleat (1)	¾ ply. - 5 x 11

- (2 pr.) 2" Ant. Brass Butt Hinges w/Screws
- (2) 1⅛"-dia. Shaker Knobs
- (4) ¼"-dia. Antique Brass Shelf Pins
- (2) Magnetic Catches w/Screws
- (2) Figure-8 Fasteners w/Screws
- (14) #8 x 1½" Fh Woodscrews
- (4) #8 x 1¼" Fh Woodscrews
- (1) 11/16" x 3 7/16" - 48" Crown Molding
- (2) 10⅜" x 20 5/16" Glass Panels (⅛" thick)

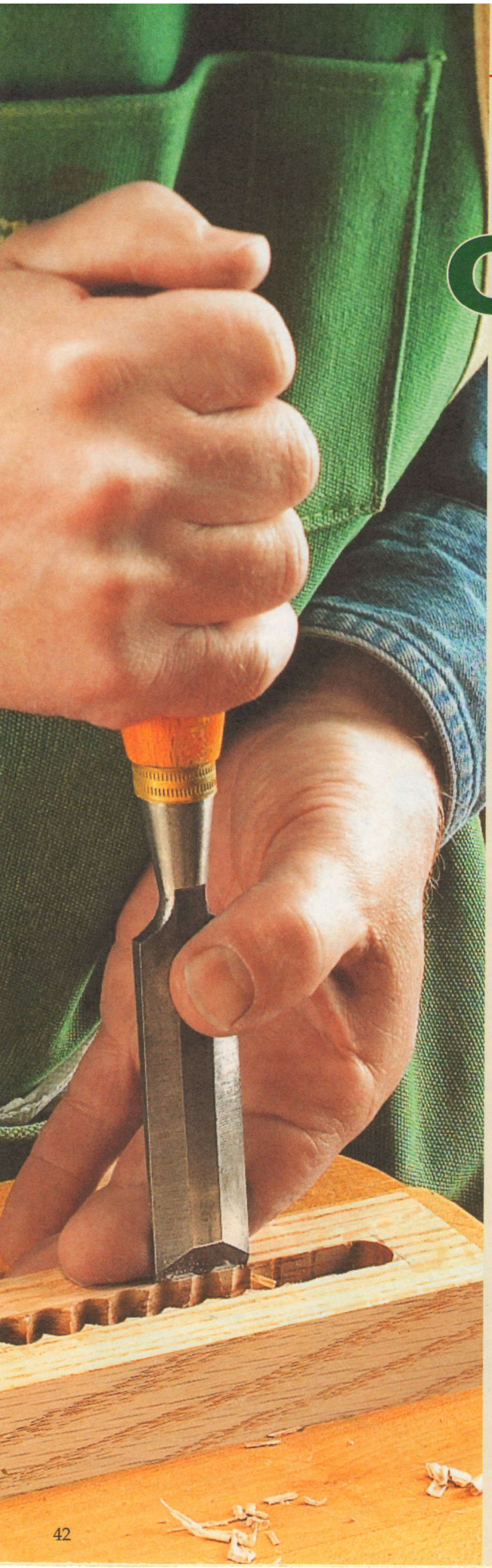

mastering Chisel Basics

Precise, controlled chisel cuts are a breeze when you use the right grip and technique.

With a shop full of power tools for cutting and shaping wood, it's easy to overlook many traditional hand tools. But most woodworkers agree that developing some skill with a chisel is time well spent. Learning a few, easy-to-master techniques will pay off in better-quality projects.

When you learn to control a chisel accurately, you can shave away small amounts of wood to fine tune the fit of a joint and accomplish a number of other common tasks. Good control starts by developing the proper grip for underhand and overhand use.

OVERHAND GRIP. When making vertical paring cuts, you need to use an overhand grip, as shown in the photo at left. The idea is to use your body weight in a very controlled way. Holding the handle close to your chest while guiding the blade with the other hand provides control both on the placement of the blade and the pressure on the cut.

The control comes from keeping your elbow close to your body. This body position allows you to keep the handle of the chisel stable, guiding the direction of the blade. It also makes the force you apply on the blade easier to control by simply shifting your weight to lean down on the chisel.

UNDERHAND GRIP. For horizontal paring cuts, an underhand grip is usually the best choice (Figure 1 below). For this grip, rest the handle in your hand with your thumb pointing forward. Once again, your opposite hand provides the control for steering the blade as you use your body to lean into the cut.

OPPOSITE HAND. These two basic grips provide the force, but your opposite hand controls the direction of the cut. Figure 2 shows how good opposite-hand technique allows you to use a mallet with accuracy. In the examples that follow, you'll see even more possibilities.

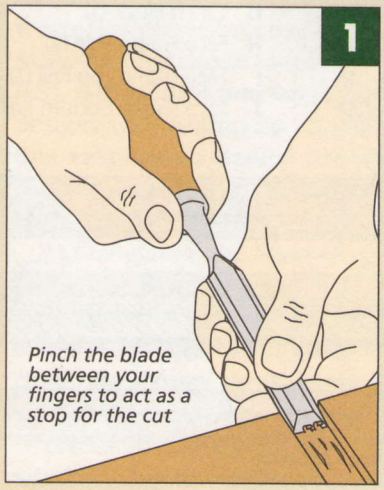

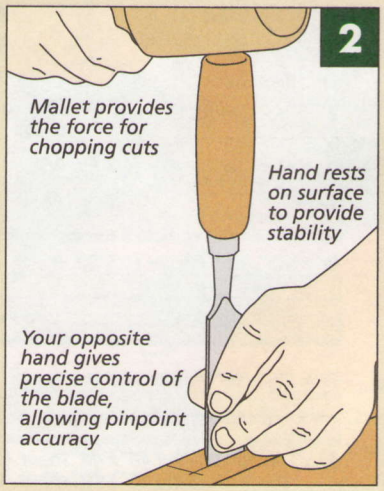

Using the Bevel

One of the handiest features of a chisel is being able to use the bevel either up or down to make a cut. Once you've learned how to take advantage of the differences in orientation, you'll be able to make precise, shaving cuts without fear of causing tearout on the workpiece.

The drawings at right show a couple of common examples. To clean out the bottom of a groove or dado, placing the bevel down against the surface makes it simple to pare away any ridges. This orientation allows plenty of fine control to prevent the blade from digging in.

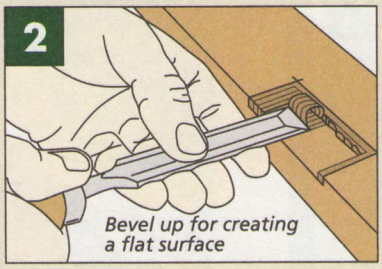

With the bevel up, you can chisel away a hinge mortise. After establishing a flat spot, the blade will cut everything in the same plane.

Cleaning up a Mortise

An easy way to cut mortises is by drilling a series of overlapping holes at the drill press. Then you can use a chisel to remove the ridges on the sides and ends.

The drawings below show how to guide the chisel to pare away the waste. This technique leaves smooth walls for a better-fitting mortise and a flat glue surface.

I start with a wide chisel on the sides. A wide blade helps keep the surface smooth, with no "steps" between cuts. Take thin shavings, starting at the tips of the ridges and move back until the wall of the mortise is smooth. By controlling the downward pressure with your dominant hand and using your opposite hand to direct the blade, you'll quickly get a feel for it. Pivoting the chisel allows you to make fine paring cuts for a smooth wall.

With the sides cleaned up, switch to a chisel that matches the width of the mortise to square the ends.

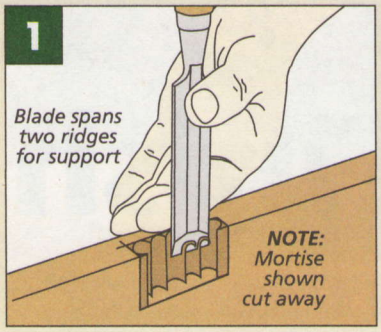

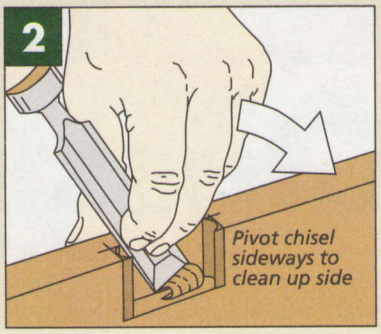

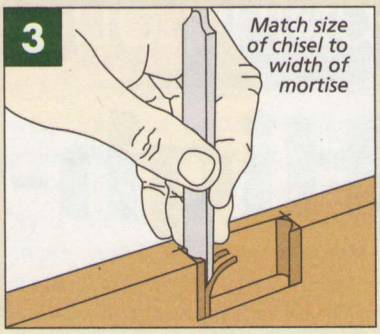

Trimming a Tenon

Cutting tenons on the table saw can leave flaws that affect the fit and strength of the finished joint. If the miter gauge or tenoning jig are even slightly out of alignment, the result is often revealed as a small "step" between the cheeks and shoulders. This step can prevent a good fit, since it won't allow the shoulder to seat against the mortised piece. But paring it without damaging the face of the workpiece can be a challenge.

The key is to start with a wide chisel flat on the shoulder of the tenon and pivot the blade into the step (Figure 1). I use an underhand grip to pare away the step. After that, I use a chisel that's a little bit narrower than the thickness of the workpiece to cut toward the tenon to remove the waste. Then, use an overhand grip to slide the blade down the length of the tenon to remove the shaving (Figure 2).

By mastering these basic chisel skills, you're well on your way to better-fitting project parts and higher-quality woodworking. W

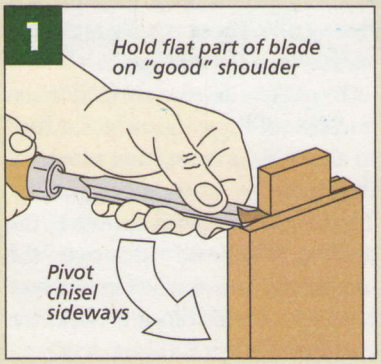

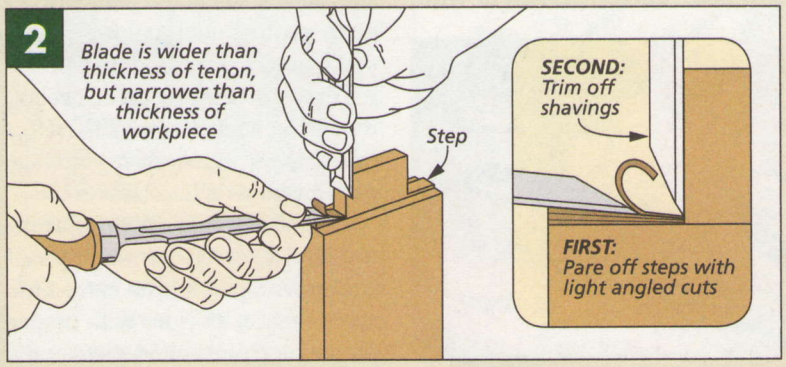

rubbing out a

High-Gloss Finish

Getting a professional-quality, mirror finish is just a matter of using the right finishing products, techniques, and a little elbow grease.

A high-gloss finish has long been the popular choice for tabletops and other flat surfaces. In addition to protecting the surface, a glossy finish also brings out the subtle beauty of the wood.

But getting a high-gloss finish presents a special challenge. The problem is achieving the "smooth-as-glass" surface. Straight from the can, glossy finishes are very reflective. But they often impart a "plastic" look to the surface. For the most part, that look is the result of the layers of finish not being completely flat.

No matter how much care you take when applying the finish, whether brushed on or sprayed, the surface will still not dry smooth. To get a professional-looking result, you'll need to level and then polish it. This two-stage process of leveling the surface and then polishing it to a mirror gloss begins where your normal finishing regimen leaves off.

The good news is, achieving a mirror shine doesn't require any special equipment, just a little extra time and patience. It begins with proper preparation of the workpiece.

SURFACE PREPARATION. A high-gloss finish will reveal any imperfections in the surface, so you'll need to start by making sure the piece is flat and smooth. A random-orbit sander is a good start for the initial rounds of sanding a tabletop. But it can leave swirl marks and ridges where the strokes overlap, even if you're careful with the finer grits. These marks are often visible on a flat surface.

To make sure the surface is flat and free of dips and ridges, I turn to an extra-long sanding block for the final few rounds of sanding. The long, wide block shown in the bottom left photo rides over the low spots and levels the surface nicely. I use this block to sand the surface through 220-grit.

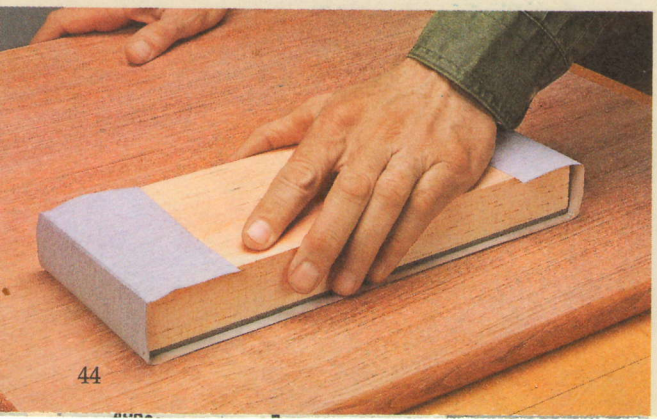

▼ A long sanding block is perfect for leveling a tabletop in preparation for a high-gloss finish.

INSPECT THE SURFACE. When you've flattened the workpiece, remove the sanding dust and give the surface a careful inspection. I use a shop vacuum with a brush attachment to take care of the dust. Then, wipe down the surface with mineral spirits and examine it for sanding marks. Placing a light behind and just above the surface (called a raking light) will help identify any dips or ridges. Once you're satisfied that the surface is flat, you're ready to move on to the next step.

GRAIN FILLING. If the wood is an open-grained variety like oak, walnut, or mahogany, you'll probably need to fill the pores of the wood with a paste wood filler before you go any further.

Commercial paste wood fillers use a bulking agent suspended in a finish and a solvent to fill the pores (see drawing below). Most fillers rely on silica as the bulking agent since it's very stable. It won't swell or shrink with seasonal changes.

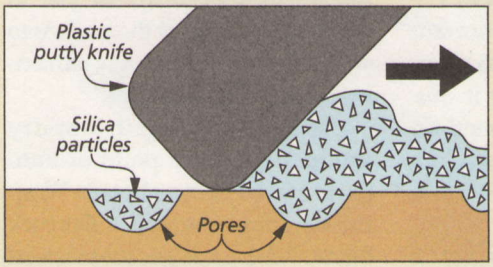

Fill the Pores. *After sanding the surface flat, pores in the wood grain need to be filled before you can achieve a perfectly level finish.*

Paste wood fillers will help you get fast and predictable results. They're available in different shades to match most commonly used types of wood. I prefer oil-based rather than water-based fillers because they give you more time to work. Water-based fillers dry a little too quickly for me, but they're the right choice if you prefer to use a water-based finish.

APPLYING GRAIN FILLERS. Filling the grain can be messy. So the first step is to cover your worksurface. I'll warn you also, that stirring the filler is actually the hardest part of the process. Chances are the filler has settled in the can and is quite hard to mix. You'll need a sturdy stirring stick and a lot of patience. The filler is ready to use when it's about the same consistency as cake frosting.

The key to applying the filler is to push it into the pores and then remove the excess without pulling it out. While some finishers prefer to use a stiff brush, I find a plastic putty knife, like the ones shown in the upper right photo, work very well. Using this type of spreader, you'll quickly get the feel for applying the filler. Work across, rather than with the grain, to cover the surface and to avoid pulling the filler out of the pores. The box below explains the technique.

▲ Plastic putty knives are a great tool for pushing grain filler into the pores.

CLEANING UP THE SURFACE. After allowing the filler to dry for a few minutes, I use the tip of the putty knife to scrape away the excess. Then, let the surface dry for a while longer, usually about half an hour. Finally, use a selection of non-woven abrasive pads like the ones in the margin photo to rub the surface with the grain to remove the remainder of the filler. Even here, be mindful not to pull it out of the pores.

FINAL INSPECTION. Now use the raking light again to examine the surface. It's not uncommon to need a second coat of filler to get a perfectly smooth surface. Once you've achieved that result, let the workpiece dry completely for a day. Then you can move on to applying the finish.

▼ Non-woven abrasive pads work well for cleaning up the last remaining filler left on the surface.

How-To: Apply a Paste Wood Filler

Apply Across the Grain. *Keep the blade of the putty knife flat and pull the filler across the grain.*

Excess. *Using the tip of the putty knife, work diagonally to scrape the excess filler from the surface.*

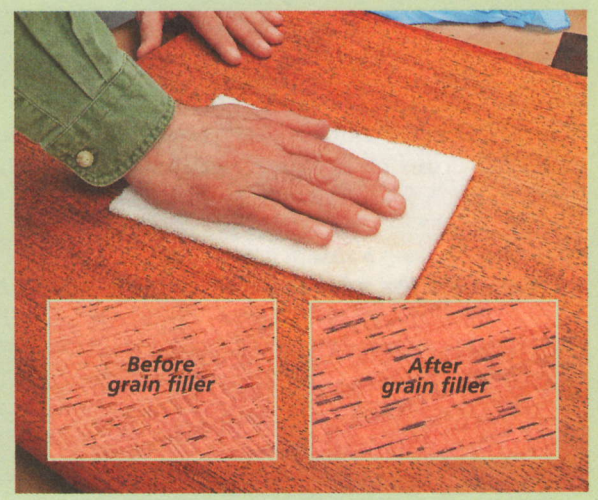

Final Cleanup. *Using a non-woven abrasive pad, lightly rub with the grain to remove the final residue from the surface, making sure not to pull it out of the pores.*

apply the FINISH

You can use any of your favorite high-gloss finishes and get great results. Brushing lacquer and varnish are the most common choices and both work very well. Regardless of your choice, the goal is the same — to build up a film thick enough to flatten and polish without rubbing through to the wood.

There are a few differences in the technique for applying each one. The biggest difference is the time required between coats. Lacquer dries quickly, usually fast enough to avoid problems of dust settling on the surface. This allows you to apply several coats in a day with little effort. Lacquer also has the advantage of "melting" into the previous coat.

Wet/dry sandpaper found in auto parts stores is the perfect choice for wet sanding a finish.

Both brushing lacquer and varnish can be rubbed out to a high-gloss finish.

For varnish, you'll need to scuff sand between each coat to remove dust particles and prepare the surface for the next coat. One coat per day is the practical limit. Varnish, however, builds faster and will require fewer coats to achieve a film thick enough to rub out.

I usually apply four coats of varnish or eight coats of lacquer before beginning to rub out the surface. But the most important step is to allow the finish to properly cure before rubbing it out. The time for this can depend on the temperature and humidity in your shop, but it's a good idea to give it at least a week.

WET SANDING. It may seem counter-intuitive, but for the next step you need to dull the finish before working it back to a final high-gloss shine. Once again, the goal here is to make sure the surface is perfectly flat and has an even scratch pattern in the varnish or lacquer. In this step, I wet-sand the surface to smooth it and remove any remaining surface imperfections.

I start with 800-grit, wet-dry sandpaper from a paint or auto parts store (photo above). Wrap the sandpaper around a flat cork block and use a lubricant to speed the process (mineral spirits for a lacquer finish, water for varnish). The lubricant creates a slurry and floats the dust away.

Working in a circular motion and using light pressure, you'll quickly level the surface and bring it to a uniformly dull sheen. Use plenty of lubricant to keep the surface wet as you work. The box at left shows the technique and a magnified view of what's happening.

When the surface looks flat and consistent, clean it with a cloth and inspect it. If there are no shiny spots left, move to 1200-grit and repeat the process through 1500-grit. After you've achieved a flat, uniform sheen, you're ready to rub the surface to a high gloss.

PUMICE & ROTTENSTONE. Now it's time to bring the dull surface to a mirror gloss. Although there are several ways to achieve this goal (see box on opposite page), the traditional method is to use

Build It Up: Finish & Flatten

Brush On the Finish. Use a good-quality brush to apply several coats of finish on the surface.

Flatten the Surface. Wrap wet/dry sandpaper around a cork block and use a lubricant on the surface.

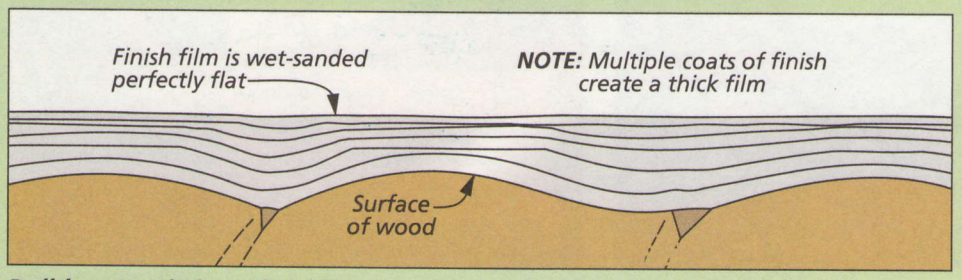

Dull but Dead Flat. *After filling the grain and building up several coats of finish, wet-sanding produces a flat surface. Although the finish is dull and almost non-reflective, it is now ready to buff to a high-gloss shine using even finer abrasives.*

two powdered abrasives — pumice and rottenstone (upper right photo). Once again, you'll need a lubricant. In this case, paraffin oil lubricates the surface and forms a slurry. A felt block is the perfect tool for this step.

Pumice is available in different grades (particle sizes) with 4F the finest. Since you already sanded through 1500-grit paper, you can move directly to 4F pumice.

Start by pouring out a small puddle of paraffin oil in the center of the workpiece and sprinkling in a small amount of pumice. Less is better.

The consistency of the slurry should be a little bit like motor oil. Now rub the mixture into the surface with only moderate pressure, again using small circles. The important thing here is to make sure to cover the whole surface with roughly a consistent number of strokes. If the paste gets too thick, simply add a few more drops of paraffin oil to the mixture. When you have a semi-gloss sheen, clean the surface and inspect it for uniformity.

ROTTENSTONE. Rottenstone is an even finer abrasive than pumice. And this is where the surface will really begin to shine. The technique is exactly like rubbing with pumice. But there's one note of caution: make sure you've completely cleaned the surface before you begin and make sure to switch to a fresh felt block. Any of the larger pumice particles will contaminate the surface and leave noticeable scratches in the finish.

At this point, the biggest temptation is to rush. Take your time and make sure to keep the pressure light and the amount of time spent on each section consistent. To check your progress, simply wipe the surface with a clean cloth and inspect the results. In the end, you'll find a mirror finish that makes all the effort worthwhile. W

▲ Use a felt block to rub the surface with the pumice (or rottenstone) and oil slurry. You don't need to apply much pressure, just work in small sections using a circular motion.

▲ The fine abrasives in pumice and rottenstone are applied with a felt block and paraffin oil.

Rubbing Alternatives: Micro-Mesh & Swirl Remover

The key to a mirror finish is to use a series of ever-finer abrasives to flatten the surface of a thick film finish. And there's more than one way to achieve this result.

MICROMESH. *Micro-Mesh* abrasives look like sandpaper, but the abrasive material is mixed into a rubber coating, designed to continually expose fresh abrasive to the work. Available from 1200 - 12,000 grit, you can rub out a high-gloss finish either wet or dry.

◄ The fine grits of *Micro-Mesh* abrasives can be used to produce a glossy finish.

AUTOMOTIVE PRODUCTS. There are also several products sold as swirl removers for auto finishes that will work on wood finishes. In these products, the fine abrasives are suspended in solution. You can apply these by hand with a cloth or with a powered polisher.

Swirl removers also bring a high-gloss shine to a varnished or lacquered surface. ►

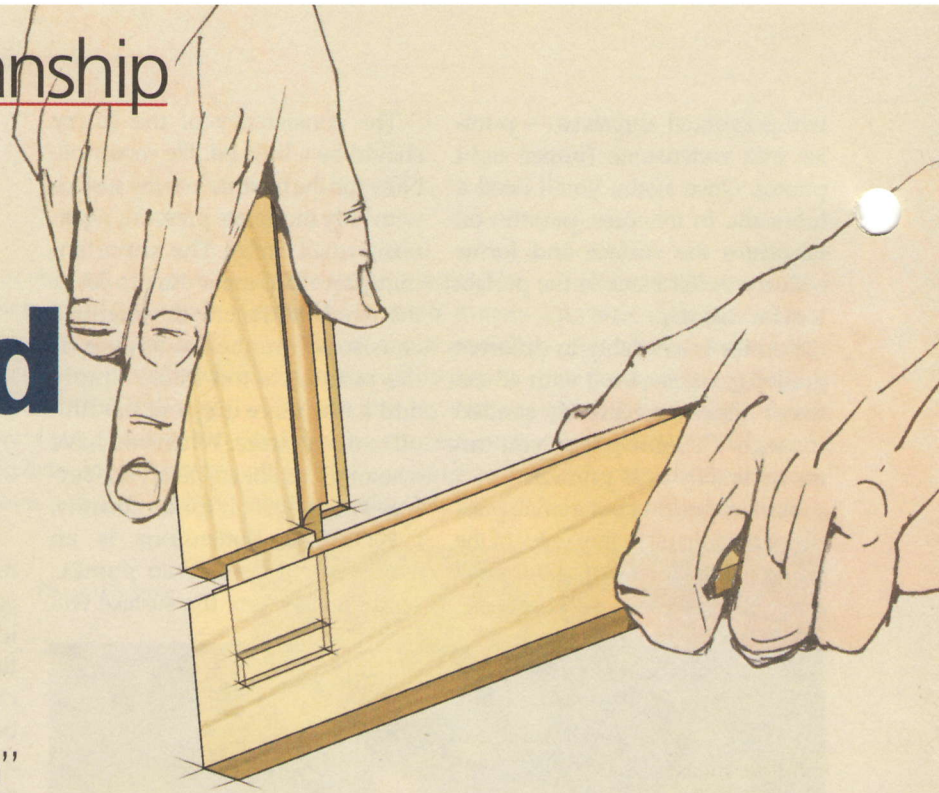

building a Molded Door Frame

The technique is "hands-on" traditional and the look is classic.

Often, a simple detail is all it takes to create a classic, traditional look in a project. Adding a thumbnail profile to the rails and stiles of a door frame is a good example. The result is a soft transition between the frame and the panel that draws attention in a subtle way.

Without a doubt, the profile shaped on the door frame complicates the joinery. The modern solution is to buy an expensive set of matching router bits for the job. However, I like to take a more traditional approach. This "hand-coped" technique, using both power and hand tools, produces a stronger joint that looks every bit as good as its router-made counterpart.

The technique really isn't difficult to master when you follow a simple routine. The step-by-step drawings shown here guide you through it. The end result is a seamless fit between the rails and stiles.

THE PROFILE. The first step is to cut the parts to final size from ¾"-thick stock. Then you'll take them to the router table to form the profile on the inside edges, as in Figure 1. To do this, I use a ¼" roundover bit set to a height of 5/16". You want to end up with a 1/16"-deep fillet or shoulder on the face.

A GROOVE. Next, you'll cut grooves in the rails and stiles for the door panel. I like to do this with a slot cutter in the router table (Figure 2). You could use a standard blade or dado set in the table saw as well.

Note that the groove is not centered on the edge. The front shoulder falls right at the lower edge of the roundover profile — 5/16" from the face. And as you can see in the detail drawing, the depth of the groove matches the width of the thumbnail profile (¼").

THE MORTISES. Now you're ready to lay out and cut the mortises in the stiles. Figure 3 shows how the groove acts as a guide for locating the mortises on the edges and sizing their width.

When laying out the length of the mortise keep a couple things in mind. First, remember to subtract the depth of the groove in the rails when figuring the length. And I always stop the mortise at least ⅜" from the end of the stile.

THE TENONS. The stiles can now be laid aside while you cut the tenons

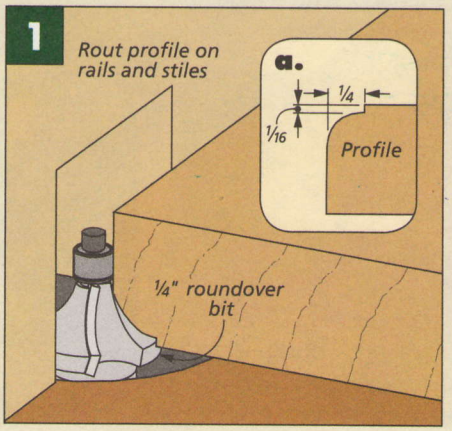

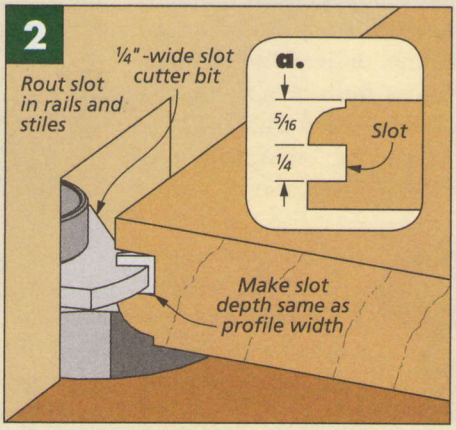

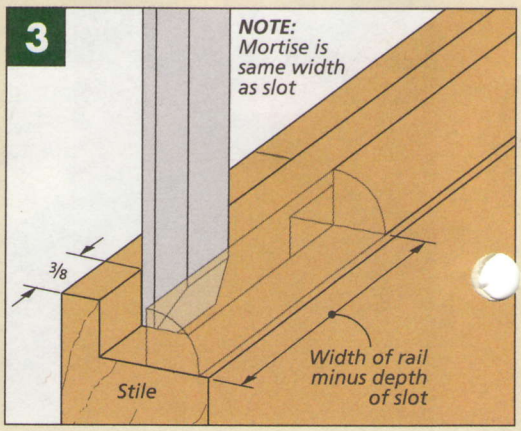

on the rails. This is probably the most challenging part of the joint.

If you take a look at Figure 4, you'll see that the tenon isn't centered on the thickness of the rail. This off-center alignment matches that of the grooves and mortises in the stiles. Furthermore, the front and back shoulders are offset. The shoulder offset should be identical to the width of the profile on the stiles — ¼". In the finished joint, this allows the front shoulder of the tenon to mate with the shoulder line of the profile on the stiles.

When cutting the tenons, you can use the grooves as a guide to thickness and position them accurately. To get the shoulder offset right (¼"), I compare careful shoulder-to-shoulder measurements along both the front and back of the rails. The difference should be exactly ½". Then once the cheeks and shoulders are cut, the tenon is completed by cutting the tenon haunch flush with the front shoulder (Figure 5).

FINAL FITTING. With the tenons completed, the joint can be partially assembled. However, the front shoulder of the tenon is blocked by the profile on the edge of the stile (Figure 6). It'll take a little more work on both the stile and the rail in order for the joint to close up.

First, you'll use a sharp chisel to remove a short section of the profile on the stile. This "waste" section should start about 1/32" short of the inside end of the mortise. Simply pare away the profile flush with the shoulder line and the bottom of the groove, as shown in Figure 7.

COPE THE RAILS. The final step is to shape or "cope" the end of the profile on the rail to fit over the remaining profile on the stile. This requires two operations.

To get a snug fit to the stile, you need a line to follow when coping the profile with a gouge. The trick here is to use a chisel and guide block (right margin) to miter the end of the profile at 45° (Figure 8). As you can see in the detail drawing, this miter cut creates a guide edge that's a match to the shape of the thumbnail profile on the stile.

The key to cutting the cope accurately, as illustrated in Figure 9, is to use a gouge with a sweep that's a close match to the radius of the profile. Start at the "short" end of the miter work back to the profile line with multiple light, chopping cuts. You want to "undercut" a bit at the tenon shoulder to ensure clearance over the end of the profile on the stile. When you get close to the profile line, you can test the joint. I shoot for a fit that's a tad tight and rely on gentle clamping pressure to close up the joint.

There are certainly faster ways to make a door frame. But when style and quality are your main goals, this technique rises to the top of the list. And the bonus is a large dose of "handcrafted" satisfaction. W

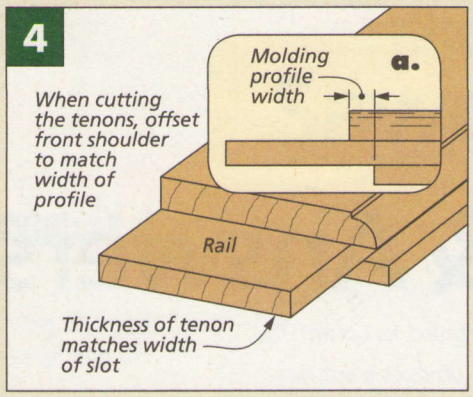

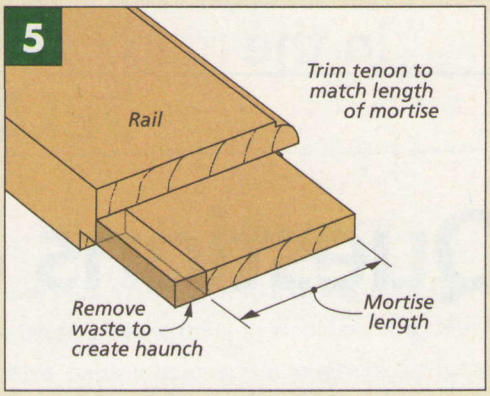

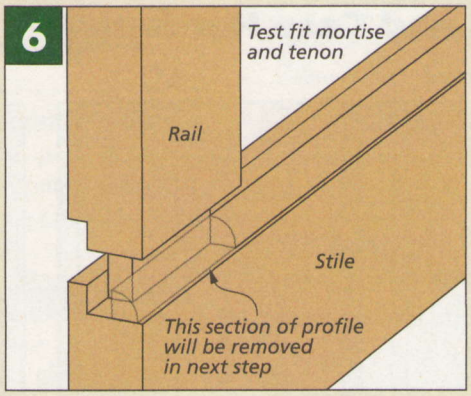

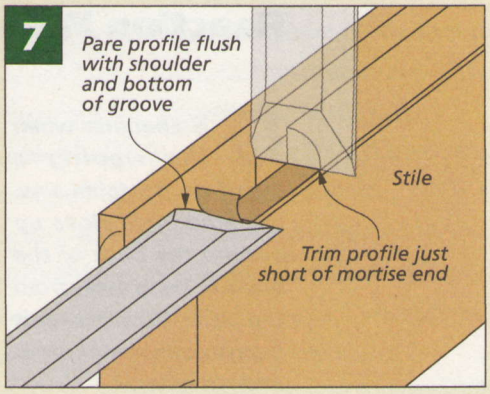

▼ A simple miter block guides the chisel when paring the end of the profile.

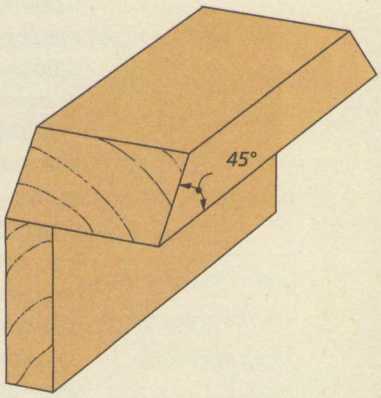

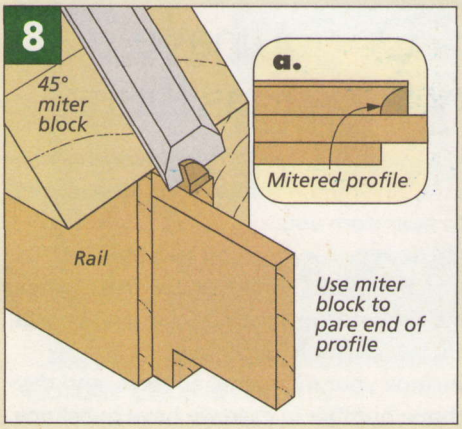

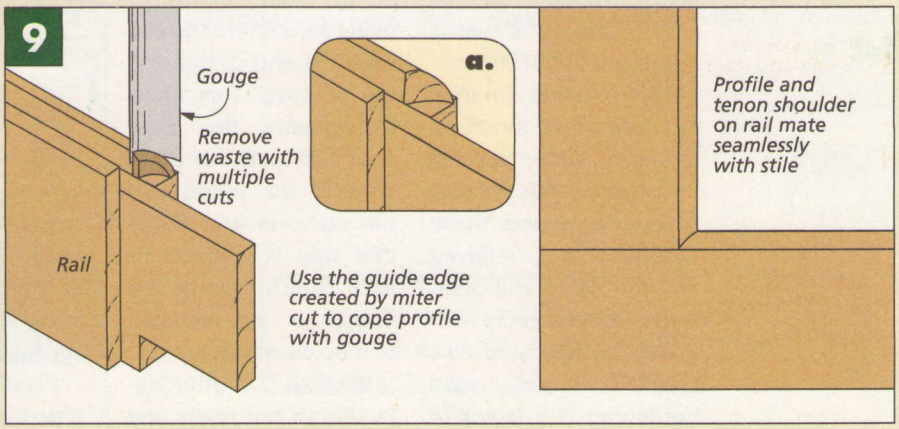

Questions & Answers

Reaction Wood and Case Hardening

Q ***Sometimes when I'm ripping a board on the table saw, the wood will close up around the back of the blade or bend away from the blade. Why does this happen with some boards and not others?***

Andy Scott
Scranton, Pennsylvania

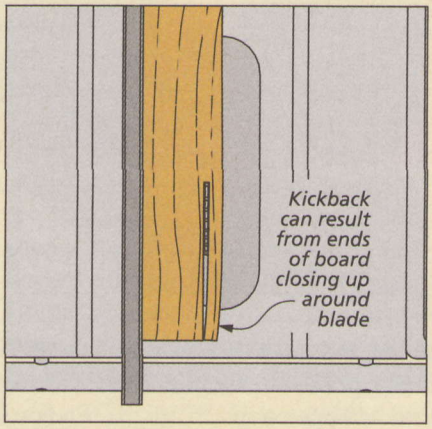

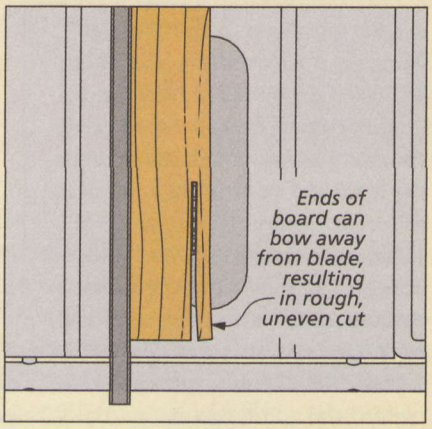

Ripping. *When ripping a board that is case hardened or cut from reaction wood, the ends of the board can either close up around the blade (left) or splay apart (right), depending on the orientation of the internal stresses in the wood.*

A Whenever the ends of a board spring apart or close up around the blade while being ripped, it's usually the result of one of two conditions — reaction wood or case hardening.

REACTION WOOD. Reaction wood is a result of the environment in which the tree grows. A tree that is leaning, has another tree pressing against it, or is subjected to a lot of strong winds will undergo different cell formation on the side of the trunk that is subjected to the strain.

This creates internal stresses within the tree's structure. When you cut into a board that consists of reaction wood, these stresses are relieved and the wood will often move unexpectedly.

CASE HARDENING. Unlike reaction wood, case hardening is a factor of how the wood is dried at the kiln. Case hardening is a condition where the outer layers of a board are dried much quicker than the inner core. Again, this creates internal stress which can result in the board moving in unexpected ways when it's cut.

To prevent case hardening, kiln operators inject steam into the kiln near the end of the drying process. This helps to equalize the pressure between the inner core of the wood and the outer layers. But if this step is skipped or isn't done properly, the boards in the kiln can end up case hardened.

SOLUTIONS. Unfortunately, there's not really any sure-fire way to look at a board before you cut it and tell if it's reaction wood or case hardened. But there are a couple of things you can do if you run into a board that is case hardened or milled from reaction wood.

SPLITTER. First, it's always a good idea to use a splitter when ripping boards. This way, the ends of the board can't close up around the blade and cause kickback.

SHORTER PIECES. Second, if you have a board that bows when you cut it, you may be able to salvage it by cutting it into smaller lengths and using it for shorter parts of your project. W

Do you have any questions for us?

If you have a question related to woodworking techniques, tools, finishing, hardware, or accessories, we'd like to hear from you.

Just write down your question and mail it to us: Woodsmith Q&A, 2200 Grand Avenue, Des Moines, Iowa 50312. Or you can email us the question at: woodsmith@woodsmith.com.

Please include your full name, address, and daytime telephone number in case we have questions.

Sources

SANDPAPER

You can find a wide variety of sandpaper at just about any hardware store or home center, as well as the woodworking suppliers listed in the margin at right. For wet/dry, silicon carbide sandpaper, automotive supply stores are often a good source.

STACK DADO BLADES

A stack dado blade is certainly one of the best investments you can make for your table saw. Several blade manufacturers (*Freud*, *Forrest*, and *Infinity Tools*) make high-quality stack dado sets for around $200-$250. If you're looking for a good, "entry-level" dado blade, the *Freud Pro Dado* (SD208) is an excellent value. It typically sells for about $100.

MULTI-GAUGE

The *Multi-Gauge* is available directly from *Oneway Manufacturing*, or from several of the sources listed in the margin.

POCKET HOLE JOINERY

When it comes to pocket hole jigs, the *Kreg Tool Company* wrote the book. You can purchase *Kreg* jigs through most woodworking dealers. Or view all the products *Kreg* has to offer by taking a look at their website, *kregtool.com*.

QUILT-TOP BOXES

Aside from the wood, the only thing you'll need to complete the quilt-top boxes on page 18 is some adhesive-backed felt. You can find this at most craft stores.

To finish the boxes, I simply applied a coat of *General Finishes' Seal-A-Cell*, followed by a couple coats of spray lacquer.

KNOCK-DOWN BOOKCASE

In addition to pocket screws, there are a few other items to purchase for the knock-down bookcase on page 24. The connector bolts (00N14.30), cap nuts (00N20.17), leveler brackets (01S04.01) and leveler feet (01S06.02) were all ordered through *Lee Valley*. For the ¼"-thick fluted glass panels, we went to a local glass shop.

To give the red oak a little warmer color, the bookcase was finished with a coat of *General Finishes' Seal-A-Cell* and then two coats of lacquer.

CORNER CABINET

To build the corner cabinet on page 32, you'll need magnetic catches (26559), a leg leveler (31210), and figure-8 fasteners (21650) from *Rockler*. For the door hinges (CP-11), shelf pins (SP-10), and Shaker knobs (WK-7), we turned to *Horton Brasses*.

We also used several router bits to create the various moldings for this project. The ogee bit (54120) and the reed bit (54360) are both made by *Amana Tool*.

When it came to selecting a paint color, we chose two different shades. The beaded plywood back of the cabinet is painted with *Benjamin Moore's Peach Brandy*. The color of the rest of the cabinet is *Masada*. Then to give the cabinet an aged look, we applied a coat of *General Finishes' Gel Stain (Java)* as a glaze.

HIGH-GLOSS FINISH

To create a traditional hand-rubbed finish, you'll need a number of supplies. These include varnish (or lacquer), paste wood filler, pumice, rottenstone, paraffin oil, felt blocks, and non-woven abrasive pads. You can find most of these finishing supplies from one of the several sources listed in the margin at right. W

Online Customer Service

Click on *Magazine Customer Service* at
www.woodsmith.com

- Access your account status
- Change your mailing or email address
- Pay your bill
- Renew your subscription
- Tell us if you've missed an issue
- Find out if your payment has been received

MAIL ORDER SOURCES

Project supplies may be ordered from the following companies:

Woodsmith Store
800-444-7527
Amana Router Bits, Finishing Supplies, Freud Dado Blades, Kreg Pocket Hole Jigs, Oneway Multi-Gauge

amazon.com
Freud Dado Blades, Kreg Pocket Hole Jigs, Oneway Multi-Gauge

Hartville Tools
800-345-2396
hartvilletool.com
Kreg Pocket Hole Jigs, Oneway Multi-Gauge

Highland Woodworking
800-241-6748
highlandwoodworking.com
Amana Router Bits, Finishing Supplies, Kreg Pocket Hole Jigs, Oneway Multi-Gauge

Horton Brasses
800-754-9127
horton-brasses.com
Hinges, Shaker Knobs, Shelf Pins

Lee Valley
800-871-8158
leevalley.com
Cap Nuts, Connector Bolts, Leveler Brackets, Leveler Feet

Oneway Manufacturing
800-565-7288
oneway.ca
Oneway Multi-Gauge

Rockler
800-279-4441
rockler.com
Figure-8 Fasteners, Finishing Supplies, Kreg Pocket Hole Jigs, Leg Levelers, Magnetic Catches

Woodcraft
800-225-1153
woodcraft.com
Finishing Supplies, Kreg Pocket Hole Jigs, Oneway Multi-Gauge

Woodworker's Supply
800-645-9292
woodworker.com
Finishing Supplies, Kreg Pocket Hole Jigs

Be sure to watch... on your Public TV station

Woodsmith SHOP

For when & where we're on, go to:
www.WoodsmithShop.com

looking inside

Final Details

◄ *Keepsake Box.* The unique look of this small treasure box is guaranteed to draw attention. And piecing together the "quilted" top will provide a fun challenge to your woodworking skills. Turn to page 18 to get started.

▼ *Corner Cupboard.* If practical, traditional design appeals to you, this project is one you won't want to pass up. From the raised panel doors to the wide crown molding, all the details are here. Check out the easy-to-follow plans on page 32.

► *Knock-Down Bookshelf.* Contemporary design and up-to-date building techniques come together in this versatile storage project. You'll find all the details beginning on page 24.